Sunnyvale

STANDARD DETAILS

FOR PUBLIC WORKS CONSTRUCTION

2006 EDITION

Revised May 2022

Department of Public Works
City of Sunnyvale
P.O. Box 3707
Sunnyvale, CA 94088-3707

Telephone: 408-730-7415
FAX: 408-730-7286

TABLE OF CONTENTS

Description			Drawing No.
SECTION A — STORM DRAINAGE AND SANITARY SEWERS			
Type I	—	Concentric Manhole — 8" to 33" Pipe	1A
Type II	—	Concentric Manhole — 36" to 48" Pipe	2A
Type III	—	Concentric Manhole — 51" Pipe and Larger	3A
Type IV	—	Concentric Drop Manhole	4A
Type VI	—	Industrial Waste Manhole — 4" to 12" Pipe	6A
Type VII	—	Manhole, Pressurized — (For New Installations)	7A
Type VIII	—	Manhole, Pressurized — (For Existing Installations)	8A
Hinged Manhole Rim & Cover			9A
24" Curb Drop Inlet			10A
24" Flat Grate Drop Inlet			11A
36" Curb Drop Inlet			12A
Type GO Inlet			13A
Bicycle Proof Grate Detail			13A-1
Standard Connection to Manhole Walls, and Reinforced Concrete Pipe			14A
Pipe Sewer Lateral			15A
Typical Trench Detail			16A-1
Typical Trench Surface Restoration (1 of 2)			16A-2
Typical Trench Surface Restoration (2 of 2)			16A-3
Typical Multiple Utility Conduit Trench Section			16A-4
Typical Narrow Trench/Rockwheel Utility Conduit Trench Detail			16A-5
SECTION B — WATER			
Water Valve Box Installation			1B
Fire Hydrant Assembly			2B
Hydrant Location Information			2B-2
Standard Blow Off			3B
Standard Air-Relief Valves 1” and 2”			3B-1
Meter Box and Vault Specifications Up to 2” Meters			4B
Meter Box and Vault Specifications Up to 2” Meters			4B-1
Fire Service Loop with Separate Domestic Service			5B
Fire Service Loop with Fire Pump and Tank			6B
Fire and Domestic Service from a Single Connection			8B
Fire and Domestic Combined Service Loop System			10B
Water Service Installation, 3" through 10" Meters			12B
Dual Meters for 3” or Larger Meters			12B-1
Two Meter Manifold Service (1” Service Line for two 5/8” Meters)			13B
Manifold Service for 3 or more Meters – up to 1” Meter			14B
Manifold Service 3 or more Meters (Alternative Pipe Arrangement)			14B-1
Installation of Cut-In Tee and Gate Valve			15B
Thrust Block for Horizontal Bends			16B
Water Line Vertical Offset			17B

Description	Drawing No.
Water Line Vertical Offset	17B-1
Standard Blow Off	17B-2
Backflow Prevention Device – Size up to 2”	18B
Recycled Water Backflow Prevention Device – Size up to 2”	18B-1
Backflow Prevention Device Enclosure	19B
Vertical Orientation Domestic RP Assembly Backflow Prevention Device Size 3” and Larger	20B
Horizontal Orientation Domestic RP Assembly Backflow Prevention Device Size 3” and Larger	20B-1
Fire Service – Reduced Pressure Detector Assembly (RPDA)	21B
Installation of Backflow Prevention Device	22B
Thrust Blocks	23B
Thrust Blocks in Bay Mud — 1 of 2	24B
Thrust Blocks in Bay Mud — 2 of 2	25B
Exothermic Welding Detail – 1	26B-1
Exothermic Welding Detail – 2	26B-2
Insulating Flange Detail	27B
Flanged Steel Insulating Joint Installation Details – 1	27B-1
Flanged Fitting Insulating Joints Installation Details – 2	27B-2
Pipe Casing Detail	28B
Bypass Pressure Reducing Valve Vault Detail	29B
Sample Station Detail	30B-1
Sample Station Location	30B-2
Main Connection Details	31B
Tracer Wire Installation	32B
SECTION C — STREETS	
2 - Lane Street Sections	1C
4 & 6 Lane Street Sections	2C
Cul De Sac Details	3C
Residential Driveway Approach in Monolithic Curb, Gutter and Sidewalk.	5C-1
Residential Driveway Approach in Non-Monolithic Curb, Gutter and Sidewalk, with Park-Strip Less Than 2’-0” Wide.	5C-3
Residential Driveway Approach in Non Monolithic Curb, Gutter and Sidewalk, with Park-Strip Width Greater Than 2’-0” But Less Than 3’-0”.	5C-4
Residential Driveway Approach in Non Monolithic Curb, Gutter and Sidewalk, with Park-Strip Greater Than 3’-0” Wide	5C-5
Residential Driveway Approach in Detached 6’ or 8’ Sidewalk With 4’ Park-Strip	5C-6
Residential Driveway Approach in Attached 10’ or 12’ Sidewalk With 4’x5’ Treewell	5C-7
Commercial and Industrial Driveway Approach in Monolithic Curb, Gutter and Sidewalk, Less Than 8’-6” Wide	6C-1
Commercial and Industrial Driveway Approach in Monolithic Curb, Gutter and Sidewalk, Greater Than 8’-6” Wide	6C-2

Description	Drawing No.
Commercial and Industrial Driveway Approach in Attached 10' or 12' Sidewalk with 4'x5' Treewell	6C-4
Curb, Gutter and Sidewalk Section	9C
Detached 6-Foot Sidewalk with 4-Foot Park-Strip	9C-1
Detached 6-Foot Sidewalk with 4-Foot Park-Strip	9C-1A
Attached 10-Foot Sidewalk with 4'x5' Treewell	9C-2
Attached 10-Foot Sidewalk with 4'x5' Treewell	9C-2A
Detached 8-Foot Sidewalk with 4-Foot Park-Strip	9C-3
Detached 8-Foot Sidewalk with 4-Foot Park-Strip	9C-3A
Attached 12-Foot Sidewalk with 4'x5' Treewell	9C-4
Attached 12-Foot Sidewalk with 4'x5' Treewell	9C-4A
New Sidewalk – Maintain Existing Tree	9C-5
New Sidewalk – Maintain Existing Tree	9C-5A
Dowel Connections to Existing Sidewalk	9C-6
Sidewalk Transition Detail	10C
Sidewalk Transition Around Existing Electroliers or Fire Hydrant	11C
Sidewalk Intersection	12C
Perpendicular Curb Ramp, Extra Wide Sidewalk	13C-1
Parallel Curb Ramp, Monolithic Sidewalk	13C-2
Combined Parallel/Perpendicular Curb Ramp, Extra-Wide Sidewalk	13C-3
Perpendicular Curb Ramp, Separated Sidewalk	13C-4
Combined Parallel/Perpendicular Curb Ramp, Separated Sidewalk	13C-5
Combined Parallel/Perpendicular Curb Ramps Separated Sidewalk with Physical Obstruction	13C-6
Curbs: Types I-6, I-8, II (24" Gutter Pan), III-6, III-8, AC Dike and Traffic Bars	15C
Curb Type II (12" Gutter Pan) and Gutter Transition	15C-1
Gutter Transition (Detail Sheet Not Used)	15C-2
Mountable Curb for Fire Truck Access Only	15C-3
Valley Gutter at Street Intersection	16C
Type IV-6 and IV-8 Deep Vertical Curb	17C
Street Monument and Monument Box	21C
Temporary Dead End Street	22C
SECTION D — ELECTROLIERS AND ELECTRICAL	
Electrolier Foundation	1D-1
Electrolier Poles	1D-2
Electrolier and Conduit Installation – Sheet 1 of 3	2D-1
Electrolier and Conduit Installation – Sheet 2 of 3	2D-2
Electrolier and Conduit Installation – Sheet 3 of 3	2D-3
Electrolier and Conduit Location — (Subdivisions Served by Underground PG&E Power Distribution System)	3D
Electrolier and Conduit Location in Median Islands	5D

Description	Drawing No.
SECTION E — SIGNS, STRIPING AND CHANNELIZATION	
Typical Hydrant Marker Location	2E-1
SOP for Right Lane and Bike Lane Closures	3E-2
R81 Sign Detail	4E-1
Combination R26/R81 Sign	4E-2
G93 Sign Detail	4E-3
Combination R26/G93 Sign	4E-4
Street Name Signs	5E
Pavement Legends: Speed Advisory	8E
Fire Access, No Parking in Driveway	11E
SECTION G — MISCELLANEOUS	
Project Information Sign	1G
SECTION RD — RECYCLED WATER	
Recycled Water Labels – 1	RW-1A
Recycled Water Labels – 2	RW-1B
Recycled Water Labels – 3	RW-1C
Recycled Water Separation Requirements – 1	RW-2A
Recycled Water Separation Requirements – 2	RW-2B
Recycled Water Design Drawings General Notes – 1	RW-3A
Recycled Water Design Drawings General Notes – 2	RW-3B
Installation of Recycled Water Service Lines	RW-4
Typical Truck and Water Supply Systems	RW-5
Dwarf Hydrant	RW-6

Description	Drawing No.
PEERY PARK STREETLIGHT STANDARD DETAILS	
Boulevard Double-Arm Streetlight in Center Median	PP1
Boulevard Single-Arm Streetlight in Curbside Planter-Strip	PP2
Pedestrian-Height Single-Arm Post-Top Decorative Streetlight	PP3

SECTION PK - PARKS AND LANDSCAPING

REFER TO PARK AND RECREATION STANDARDS FOR DETAILS FOR SITE FURNISHING AND PAVING, DRAINAGE, FENCING, GATE, ATHLETIC, AND IRRIGATION.
https://www.sunnyvale.ca.gov/home/showpublisheddocument/3270/637985958686370000

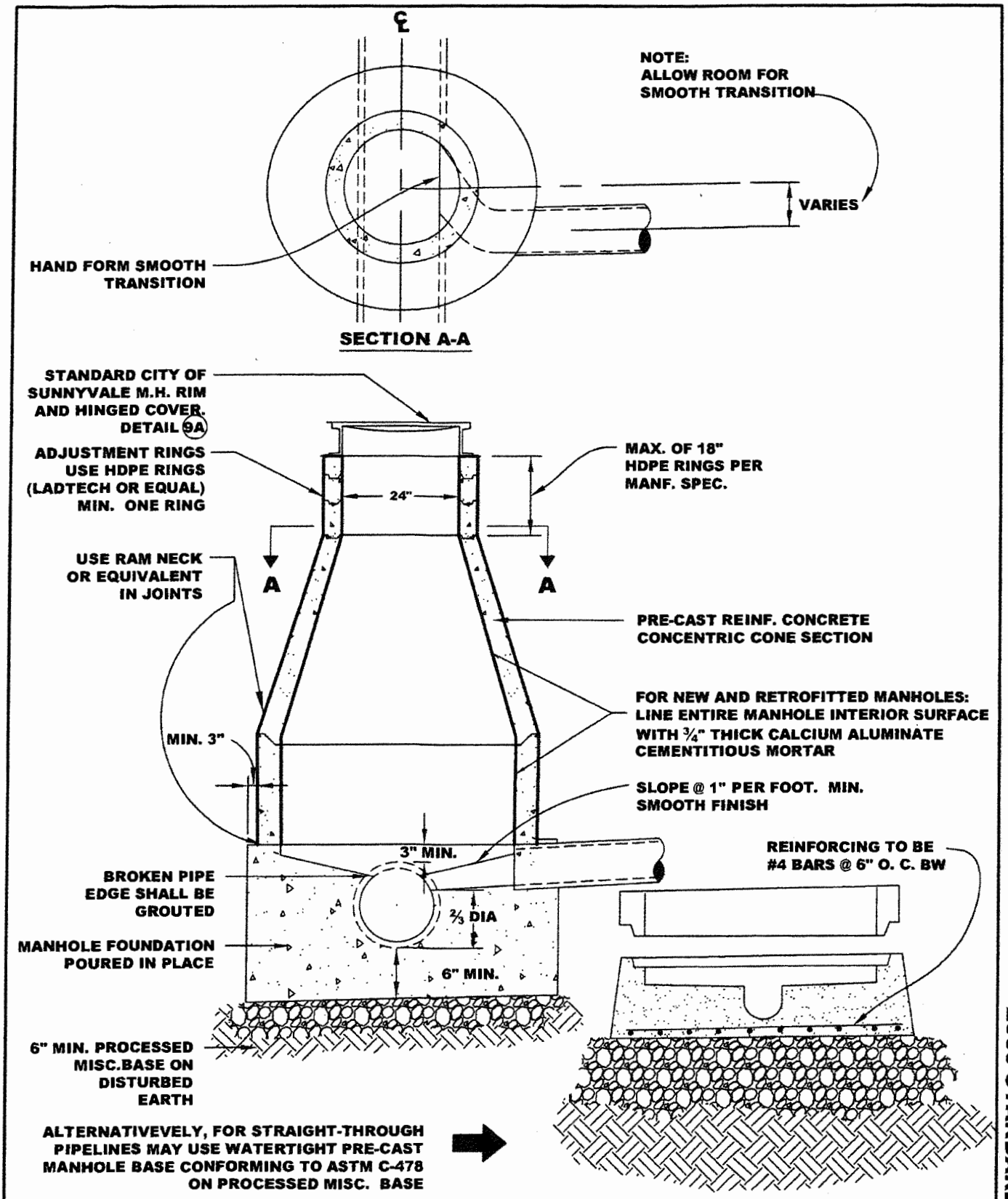

TYPE I - CONCENTRIC MANHOLE
8" TO 33" PIPE

APPROVED BY:

DATE : JUNE 30, 2006
REVISED : APRIL, 2013

DWG. 1A

2006 STANDARD DETAILS

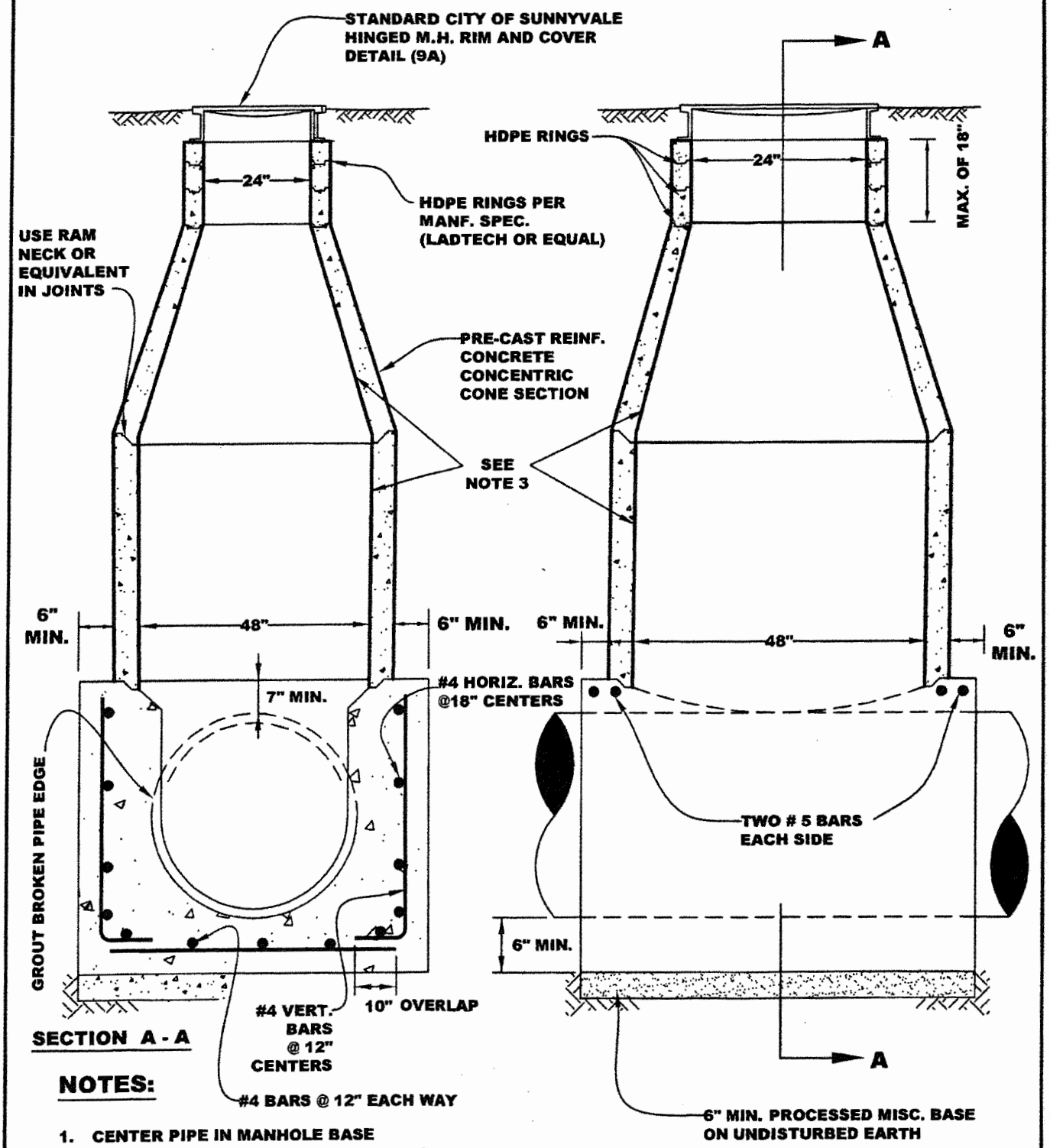

NOTES:

1. CENTER PIPE IN MANHOLE BASE
2. 3" MIN. COVER TO ALL REINFORCING STEEL
3. FOR NEW AND RETROFITTED MANHOLES: LINE ENTIRE MANHOLE INTERIOR SURFACE WITH ¾" THICK CALCIUM ALUMINATE CEMENTITIOUS MORTAR

TYPE II - CONCENTRIC MANHOLE
36" TO 48" PIPE

APPROVED BY:

DATE : JUNE 30, 2006
REVISED : APRIL, 2013

DWG. 2A

2006 STANDARD DETAILS

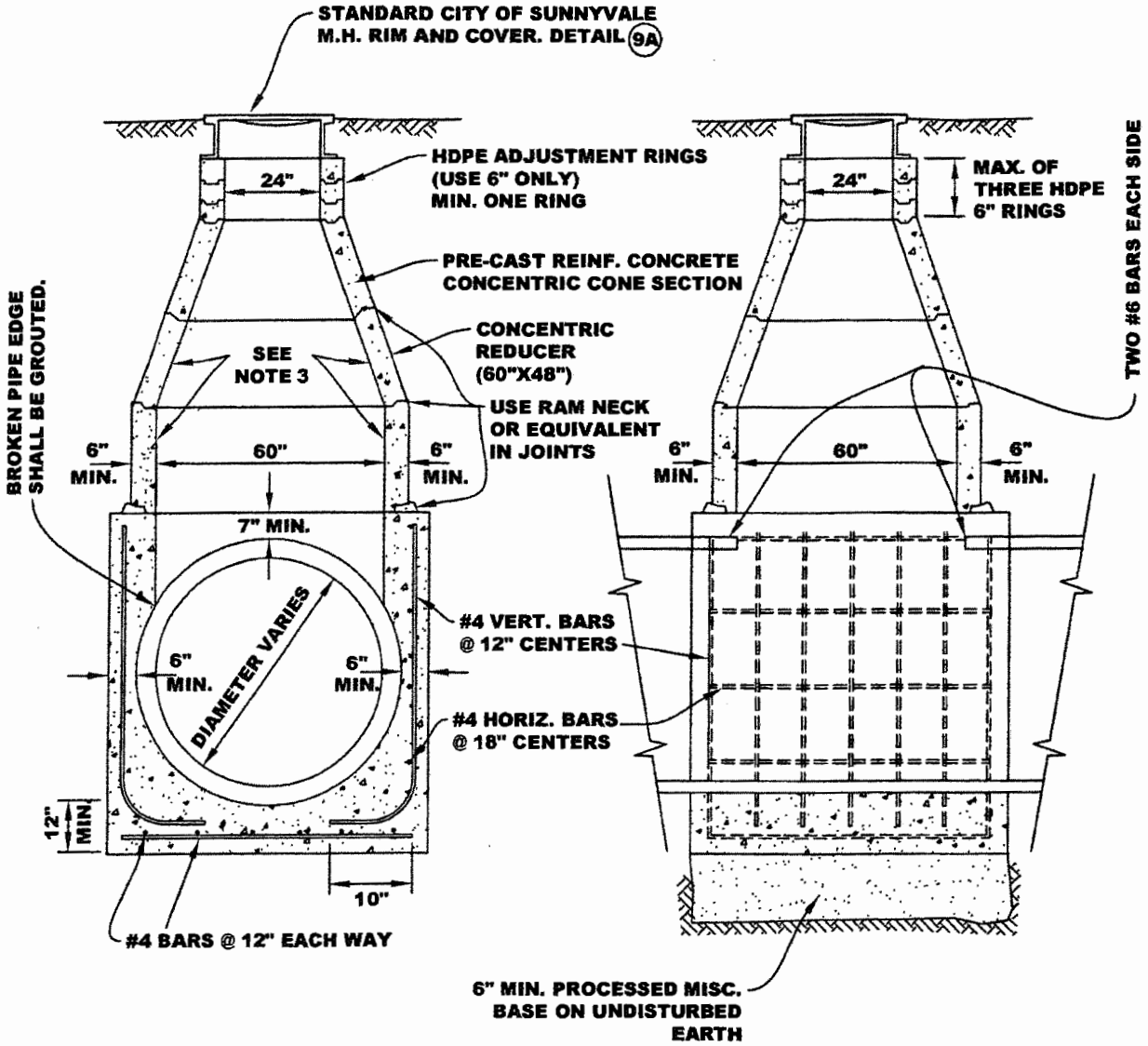

END VIEW **SIDE VIEW**

NOTES:

1. CENTER PIPE MANHOLE BASE
2. 3" MIN. COVER TO ALL REINFORCING STEEL
3. FOR NEW AND RETROFITTED MANHOLES: LINE ENTIRE MANHOLE INTERIOR SURFACE WITH ¾" THICK CALCIUM ALUMINATE CEMENTITIOUS MORTAR

TYPE III - CONCENTRIC MANHOLE 51" PIPE & LARGER	APPROVED BY:	
	DATE : JUNE 30, 2006 REVISED : APRIL, 2013	DWG. 3A

2006 STANDARD DETAILS

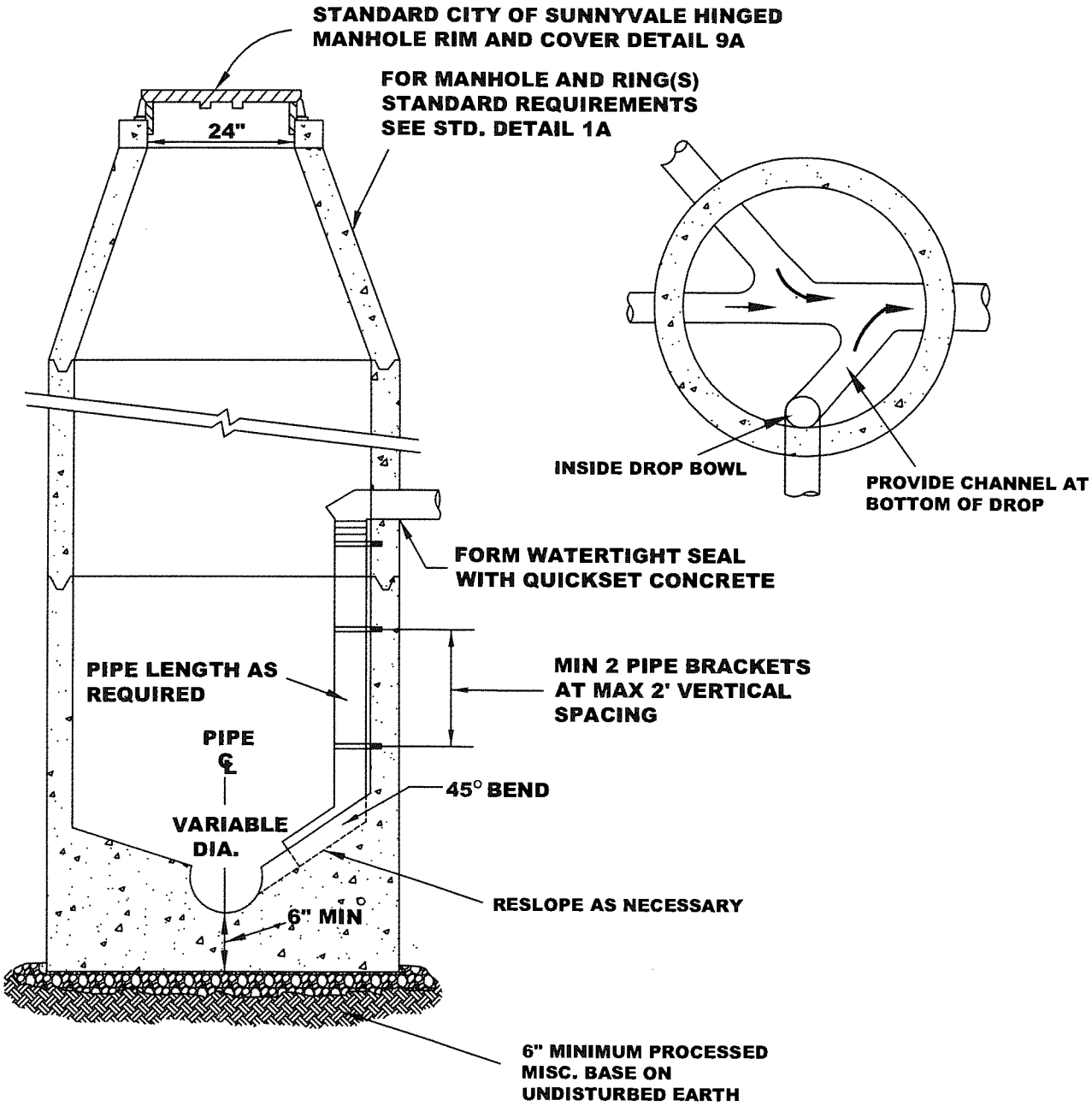

NOTES:

1. DROPS OF GREATER THAN 2' (INVERT TO INVERT) REQUIRE INSIDE DROP MANHOLE. OUTSIDE DROPS ARE NOT ALLOWED. FOR DROPS LESS THAN 2', PROVIDE SLOPE TO THE CONCRETE CHANNEL.
2. DROP BOWL AS MANUFACTURED BY RELINER-DURAN OR APPROVED EQUAL. MOUNTING HARDWARE SHALL BE 316 SS. AFTER INSTALLATION, COAT ALL METAL PARTS WITH EPOXY MASTIC, RUST-OLEUM STEEL-TECH OR APPROVED EQUAL. SIZE OF BOWL AND PIPING TO BE PER VENDOR RECOMMENDATIONS AS APPROVED BY THE CITY.
3. PIPING SHALL BE ASTM D3034 SDR 26 PVC WITH GASKETED JOINTS AND FITTINGS.
4. FOR STANDARD REQUIREMENTS OF MANHOLES, REFER TO STANDARD DETAIL 1A.

TYPE IV - CONCENTRIC DROP MANHOLE	APPROVED BY:	
	DATE : JUNE 30, 2006 REVISED : JULY 6, 2017	DWG. 4A

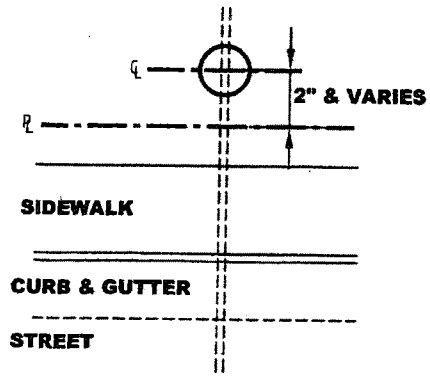

TYPICAL LOCATION

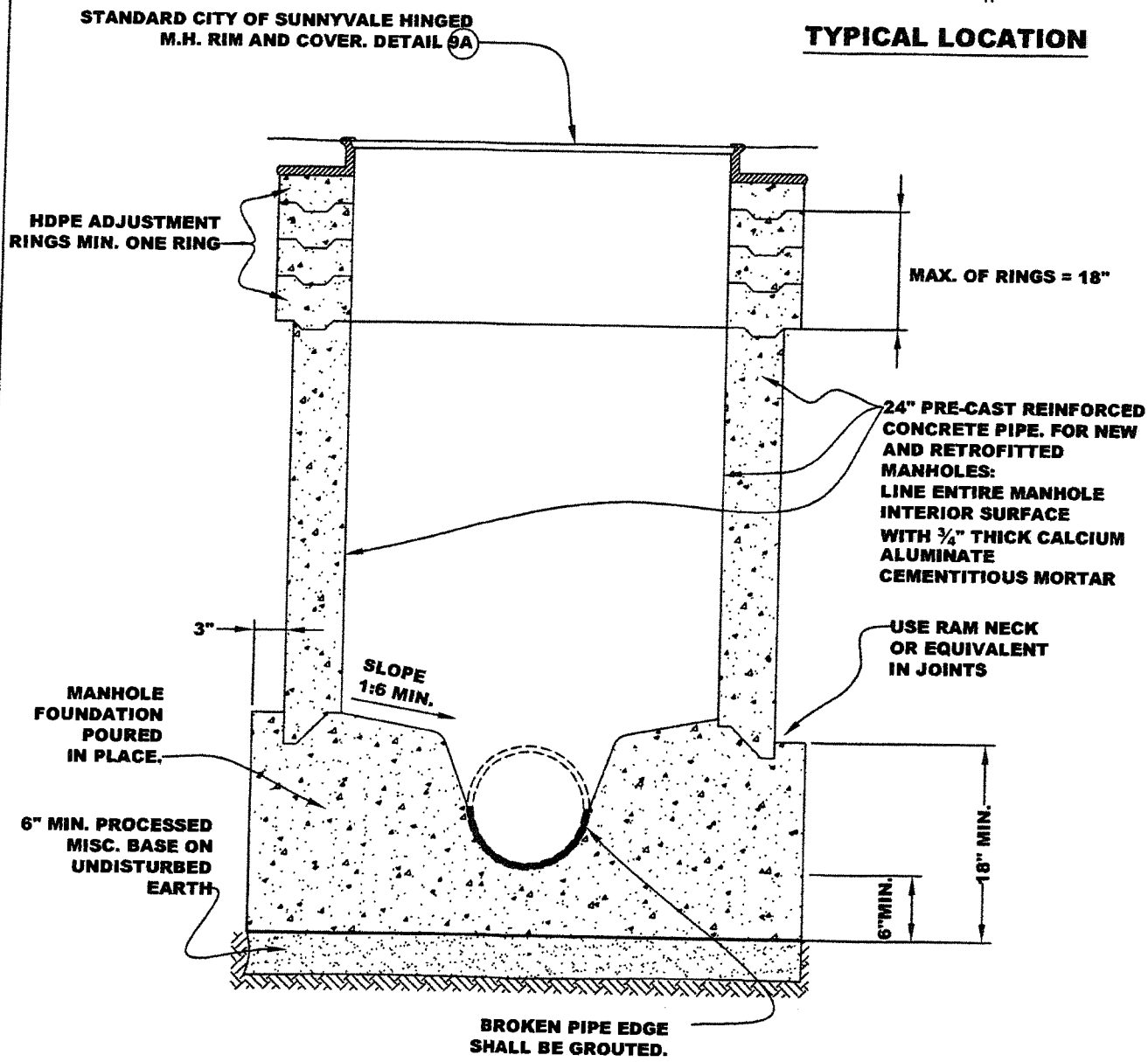

TYPE VI - INDUSTRIAL WASTE MANHOLE 4" TO 12" PIPE

APPROVED BY:

DATE : JUNE 30, 2006
REVISED : APRIL, 2013

DWG. 6A

2006 STANDARD DETAILS

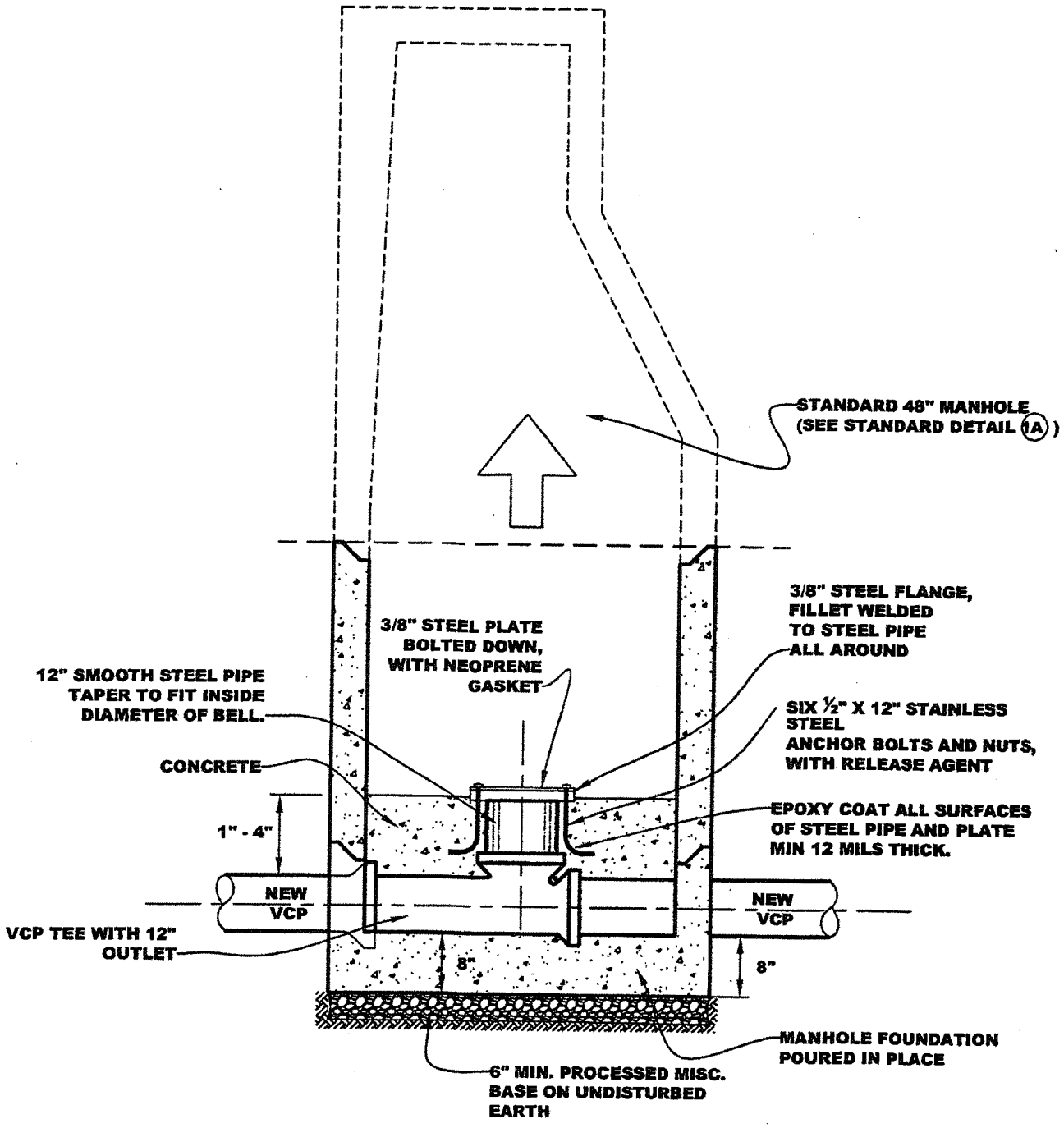

TYPE VII MANHOLE, PRESSURIZED
(FOR NEW INSTALLATIONS)

APPROVED BY

DATE : JUNE 30, 2006

DWG. 7A

2006 STANDARD DETAILS

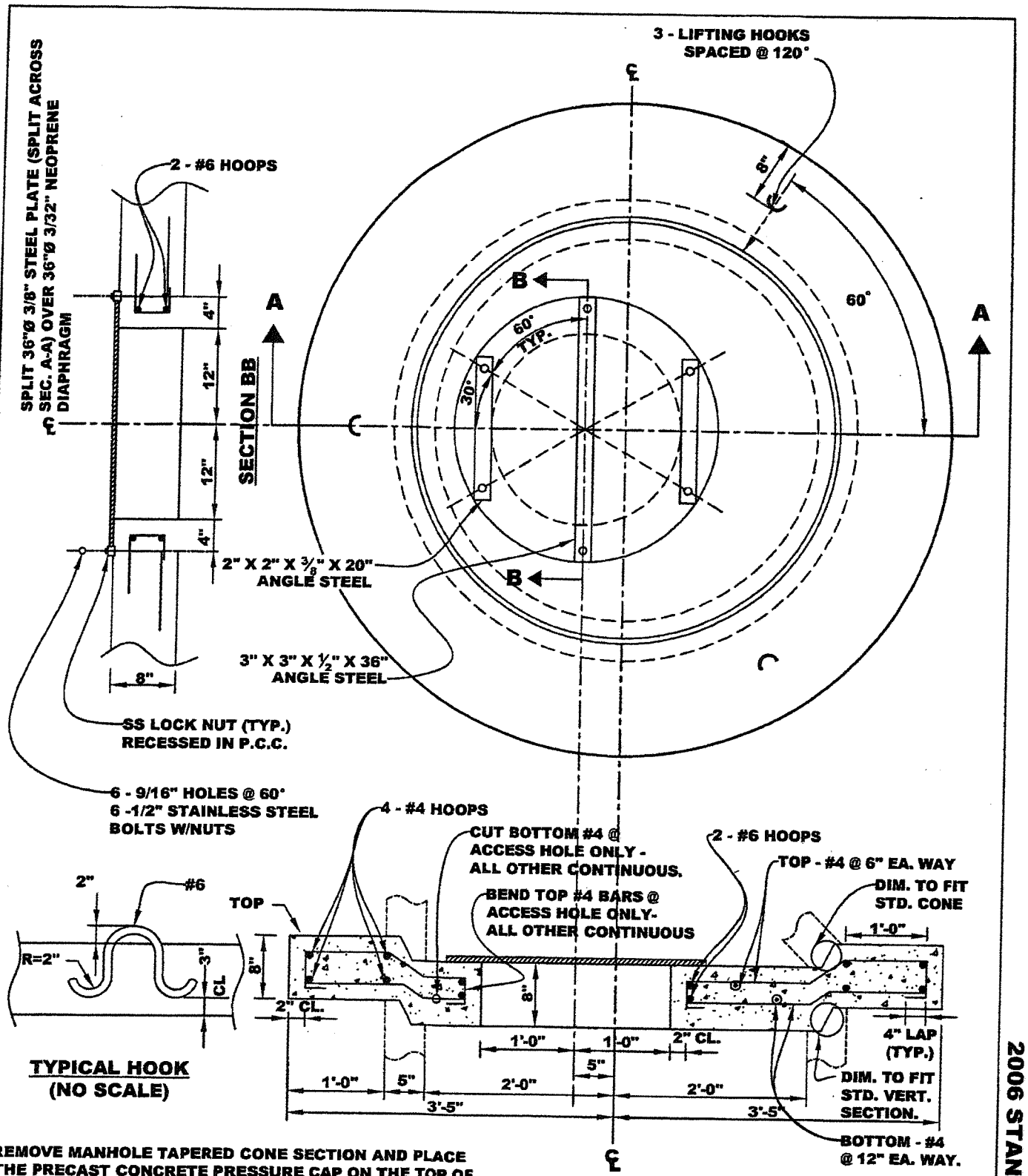

REMOVE MANHOLE TAPERED CONE SECTION AND PLACE THE PRECAST CONCRETE PRESSURE CAP ON THE TOP OF THE PARALLEL PIPE SECTION. REINSTALL THE TAPERED CONE SECTION AND RECONSTRUCT THE MANHOLE TOP.

TYPE VIII MANHOLE, PRESSURIZED (FOR EXISTING INSTALLATIONS)	APPROVED BY:	
	DATE : JUNE 30, 2006	DWG. 8A

2006 STANDARD DETAILS

MANHOLE FRAME SHALL BE INSTALLED WITH THE HINGE ORIENTED TO THE DIRECTION OF TRAFFIC SO THAT WERE IT TO BE HIT, IT WILL FALL INTO THE CLOSED POSITION.

ALL MATERIALS USED IN MANUFACTURING SHALL CONFORM TO ISO 1083.

COVER MARKINGS SHALL BE "SANITARY SEWER" FOR SANITARY SEWER MANHOLES OR "STORM DRAIN", "STORM SEWER", OR "STORM" FOR STORM DRAIN MANHOLES UNLESS OTHERWISE SPECIFIED. COVER MARKINGS SHALL BE EMBOSSED/CAST ONTO THE MANHOLE.

CASTINGS SHALL BE DIPPED IN BLACK BITUMINOUS PAINT. MANUFACTURER SHALL CERTIFY THAT FRAME AND COVER MEET ALL LOAD REQUIREMENTS FOR H-20 HIGHWAY LOADING.

ADJUSTMENT RINGS: USE HDPE RINGS (LADTECH OR EQUAL) MIN. ONE RING

OPTIONAL LOCKING MECHANISM

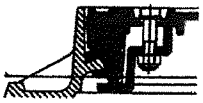

FRAME MARKING

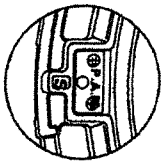

DETAIL A:
LIFTING HOLES

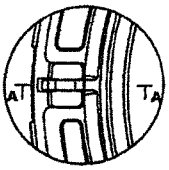

A-A

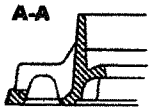

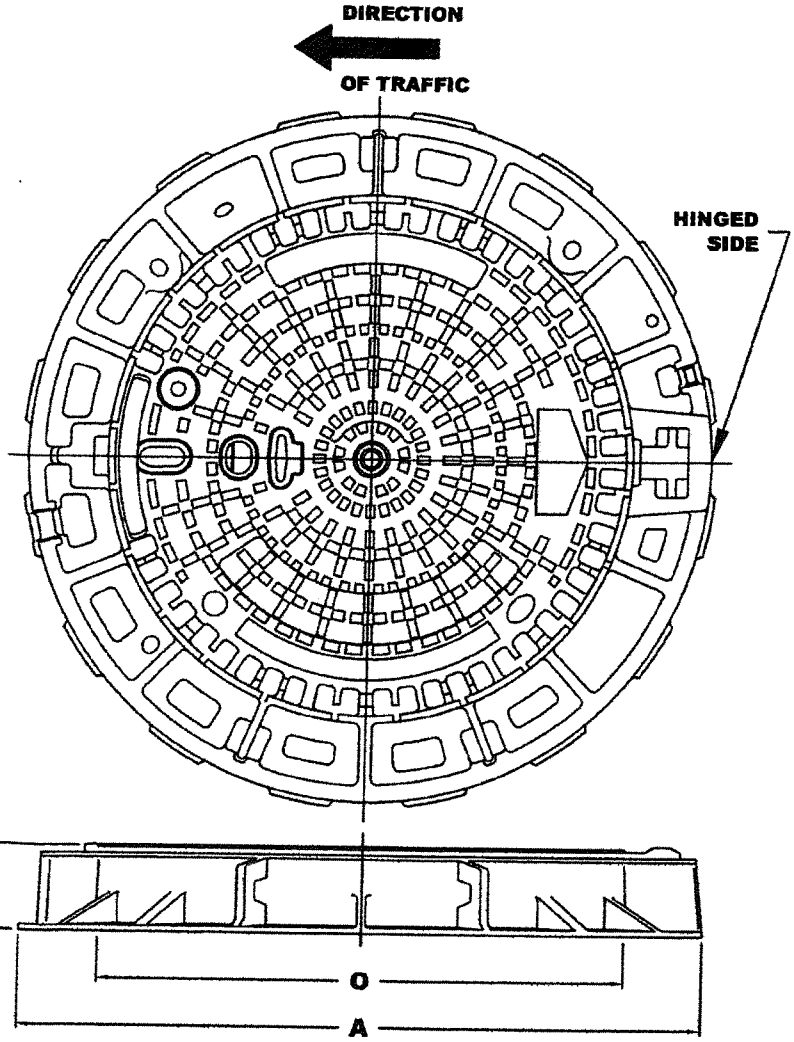

DIMENSIONS (INCHES)			WEIGHT (lbs)		REFERENCE
A	O	H	COVER AND FRAME	COVER ONLY	
33 1/2"	24	4	195	122	CDPA60EHSSE

FOR ALL NEW AND RETROFITTED MANHOLES

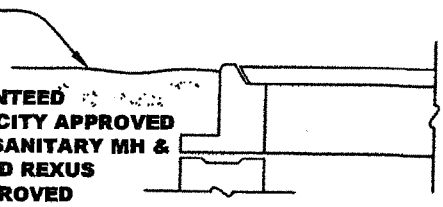

USE CERTAINTEED PAMREX OR CITY APPROVED EQUAL FOR SANITARY MH & CERTAINTEED REXUS OR CITY APPROVED EQUAL FOR STORM MH

MH COVERS WITH HANDHOLES ARE NOT AN APPROVED EQUAL

DETAIL FOR NON - PAVED SURFACE

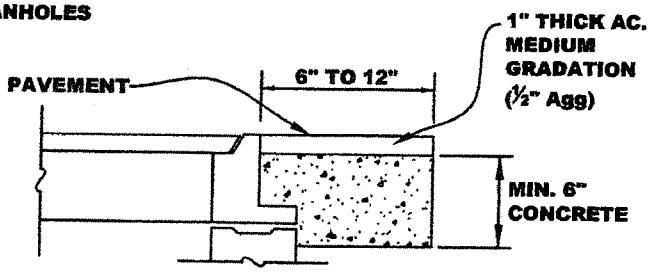

DETAIL FOR PAVED SURFACE

HINGED MANHOLE RIM & COVER

APPROVED BY:

DATE : JUNE 30, 2006
REVISED : APRIL 21, 2014

DWG. 9A

2006 STANDARD DETAILS

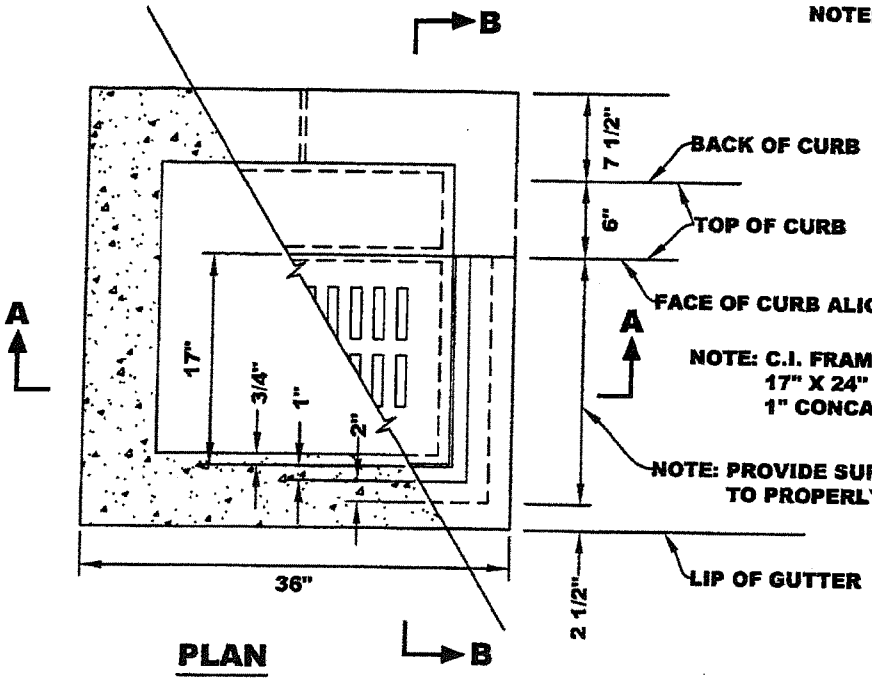

NOTE: INSTALL "NO DUMPING" MESSAGE ON TOP OF CURB AT CATCH BASIN

NOTE: C.I. FRAME AND BICYCLE PROOF GRATE 17" X 24" NOMINAL 1" CONCAVE GRATE*

NOTE: PROVIDE SUFFICIENT CLEARANCE TO PROPERLY SEAT GRATE

PLAN

* CALTRANS STANDARD PLAN D77-8 SHALL BE AN ACCEPTABLE ALTERNATIVE

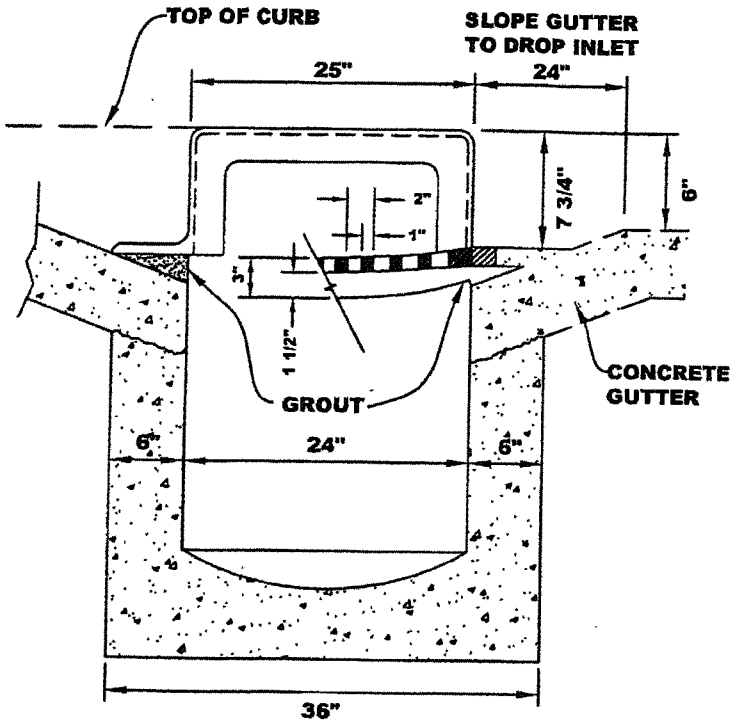

SECTION A-A

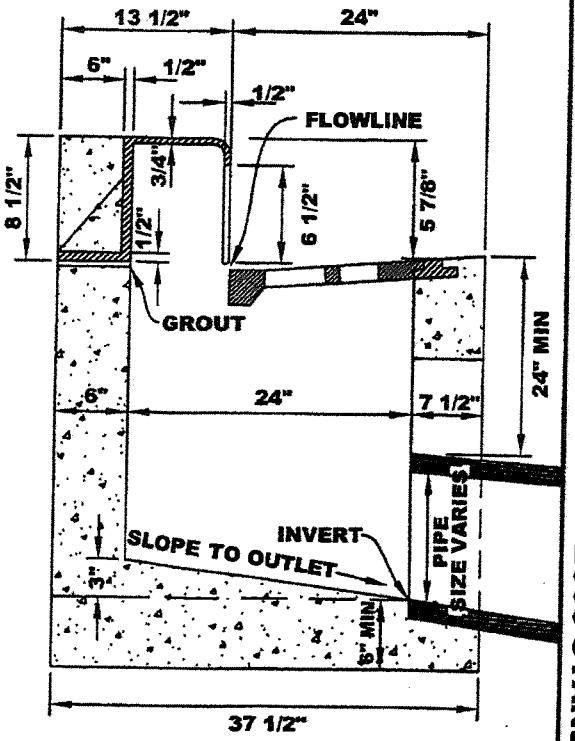

SECTION B-B

24" CURB DROP INLET	APPROVED BY:	
	DATE : JUNE 30, 2006	DWG. 10A

2006 STANDARD DETAILS

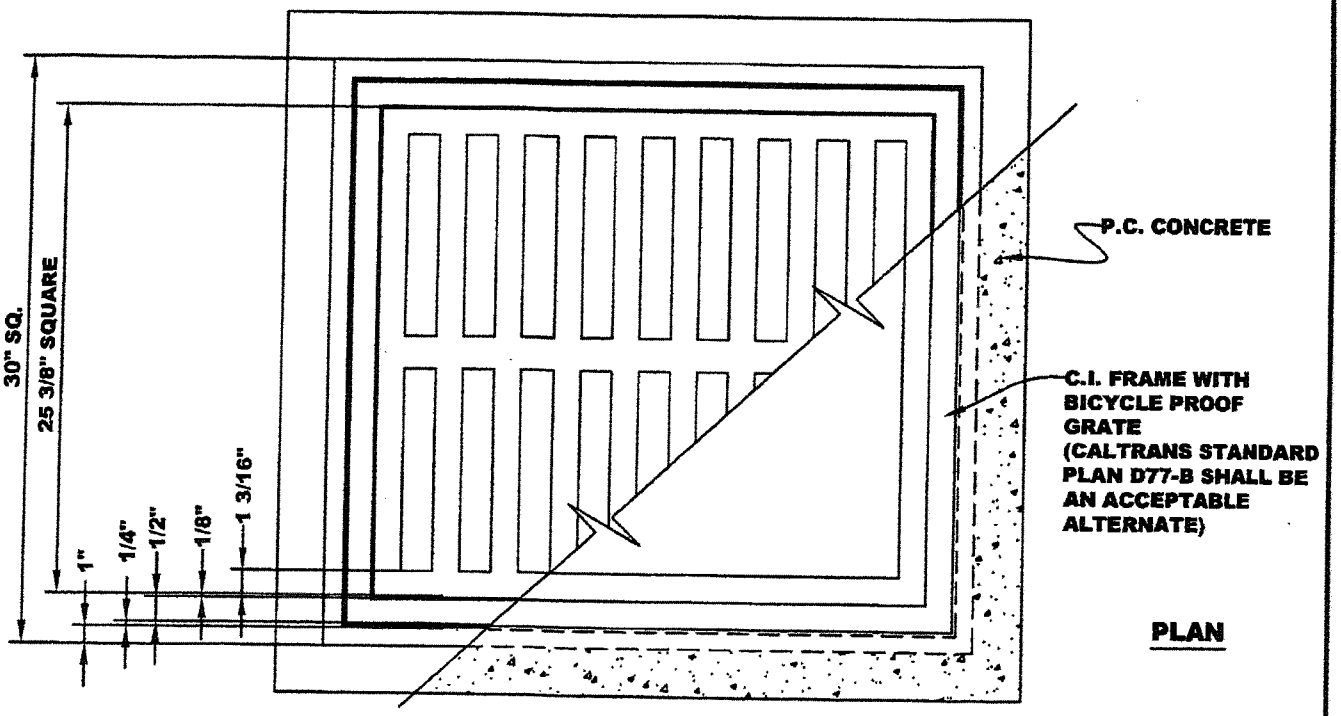

PLAN

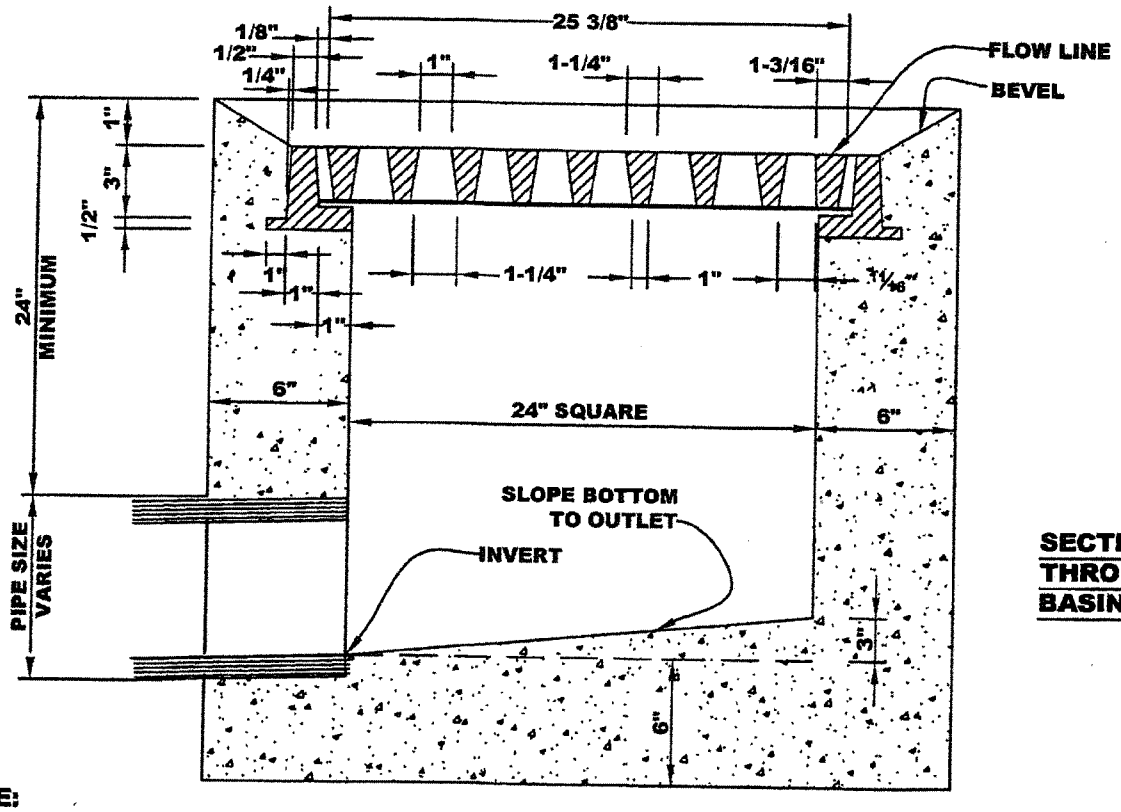

SECTION THROUGH BASIN

NOTE:
INSTALL "NO DUMPING" MESSAGE IMMEDIATELY ADJACENT TO DROP INLET

24" FLAT GRATE DROP INLET	APPROVED BY:	
	DATE : JUNE 30, 2006	DWG. 11A

2006 STANDARD DETAILS

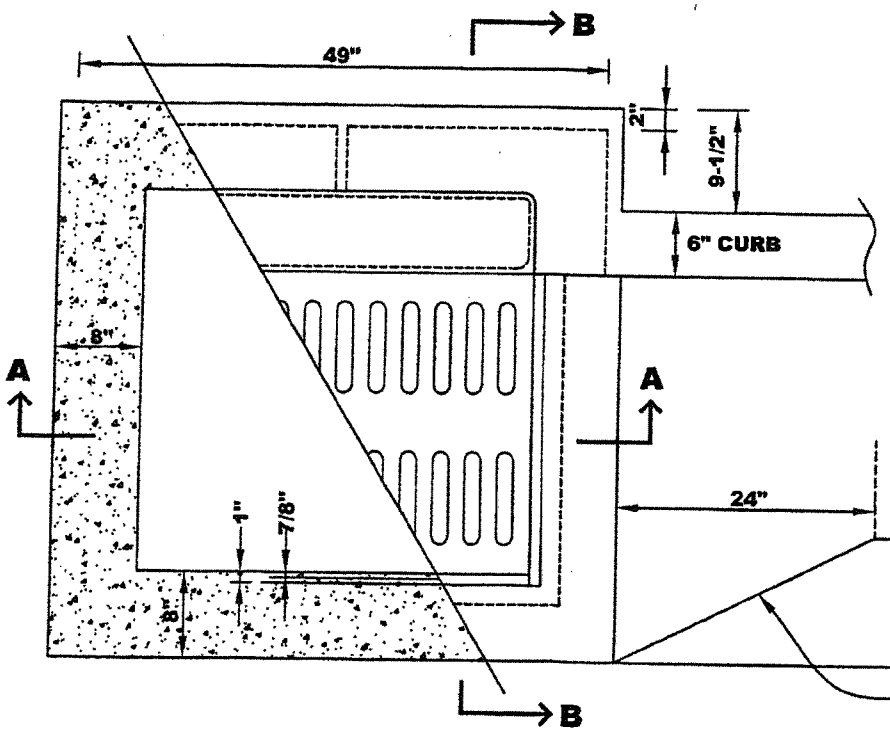

GENERAL NOTES:

1. FRAME AND GRATING TO BE OF CAST IRON (PHOENIX P6002A OR EQUAL), OR HOT DIP GALVANIZED IN ACCORDANCE WITH ASTM A-123.
2. FRAME TO BE SET IN CEMENT MORTAR, GRATES SHALL BE BICYCLE PROOF. (CALTRANS STANDARD PLAN D77-B SHALL BE AN ACCEPTABLE ALTERNATE.
3. INSTALL "NO DUMPING" MESSAGE AT TOP OF CURB AT CATCH BASIN.

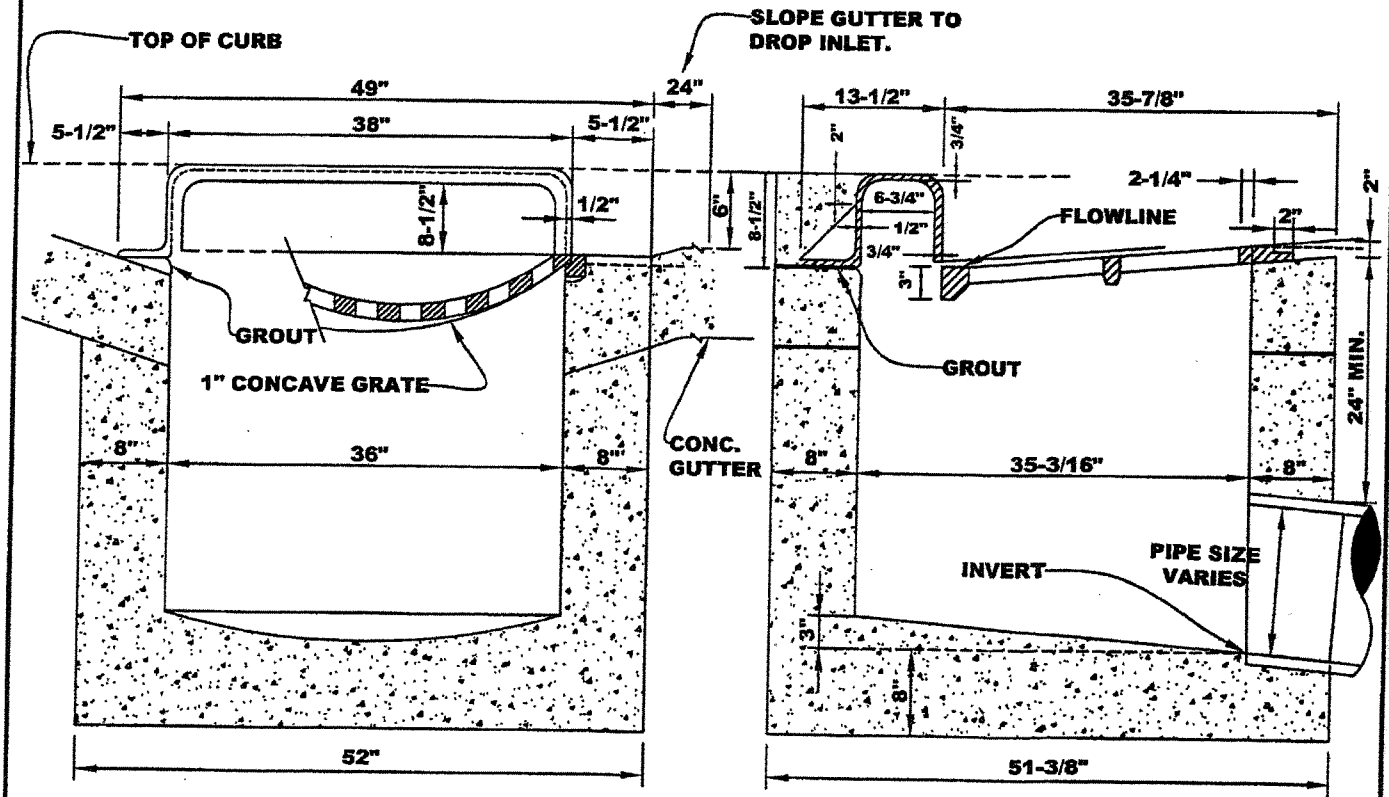

SECTION A - A

SECTION B - B

- ALL CASTING DIMENSIONS ARE APPROXIMATE

36" CURB DROP INLET	APPROVED BY:	
	DATE : JUNE 30, 2006	DWG. 12A

2006 STANDARD DETAILS

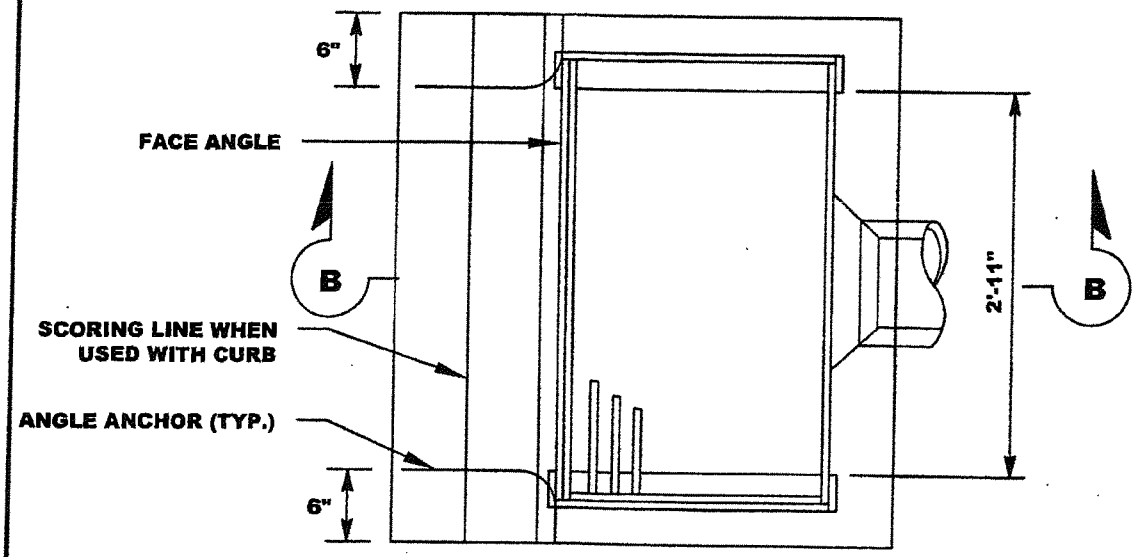

PLAN

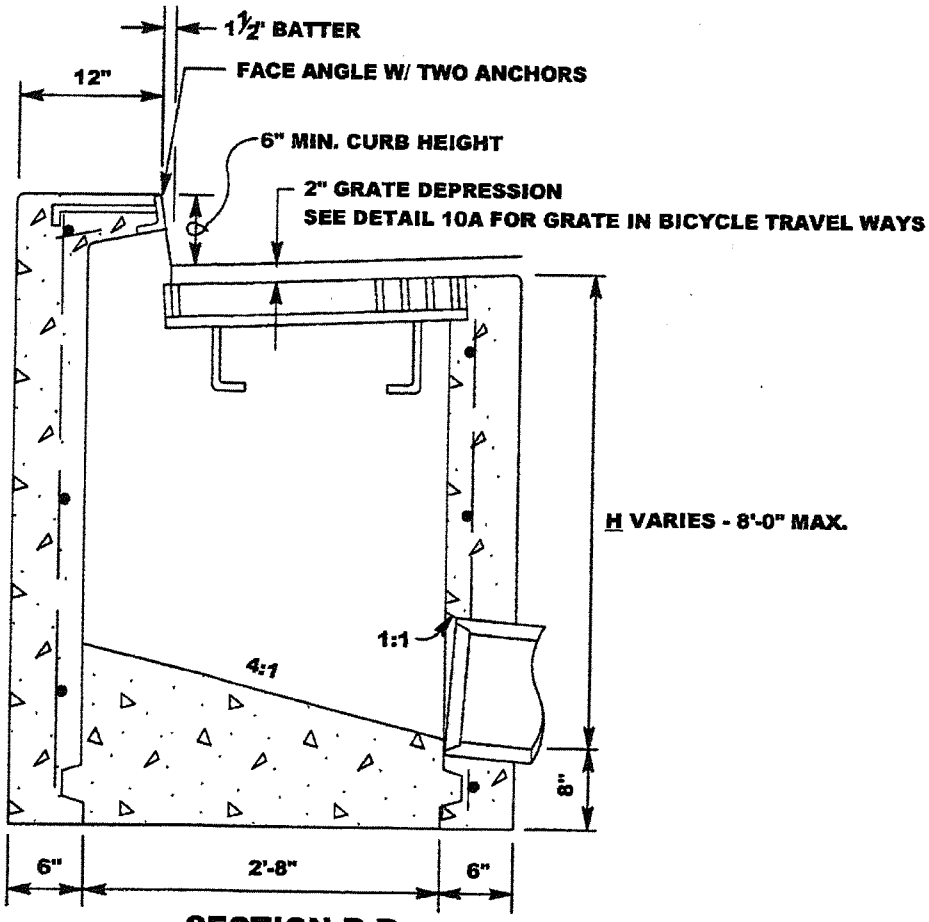

SECTION B-B

TYPE GO INLET	APPROVED BY:	
	DATE : JUNE 30, 2006	DWG. 13A

2006 STANDARD DETAILS

PER LATEST EDITION

OF

CALTRANS

STANDARD PLANS

D77B

TYPE 18-8C AND 24-10C GRATE (CAST NODULAR IRON)

2006 STANDARD DETAILS

BICYCLE PROOF GRATE DETAILS	Marvin A. Rose APPROVED BY:	
	DATE : JUNE 30, 2006 REVISED : JUNE, 2007	DWG. 13A-1

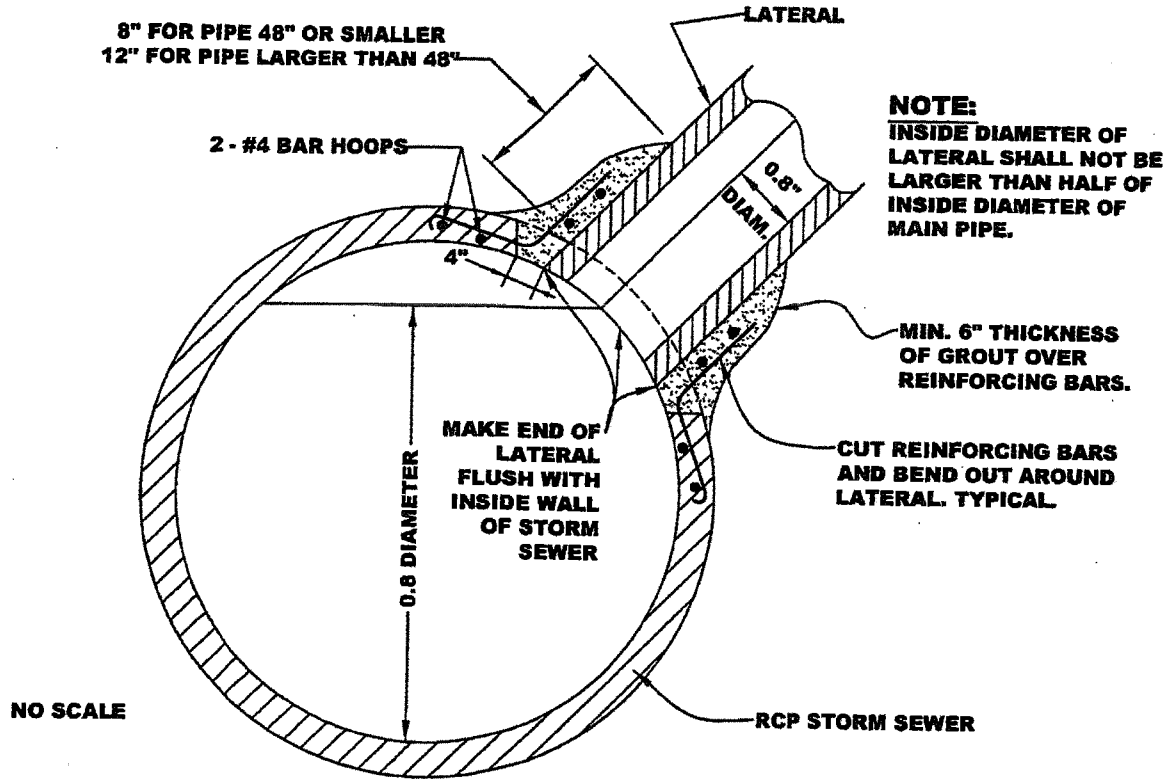

NOTE:
INSIDE DIAMETER OF LATERAL SHALL NOT BE LARGER THAN HALF OF INSIDE DIAMETER OF MAIN PIPE.

NO SCALE

CONNECTION TO REINFORCED CONCRETE PIPE

36" RCP AND LARGER

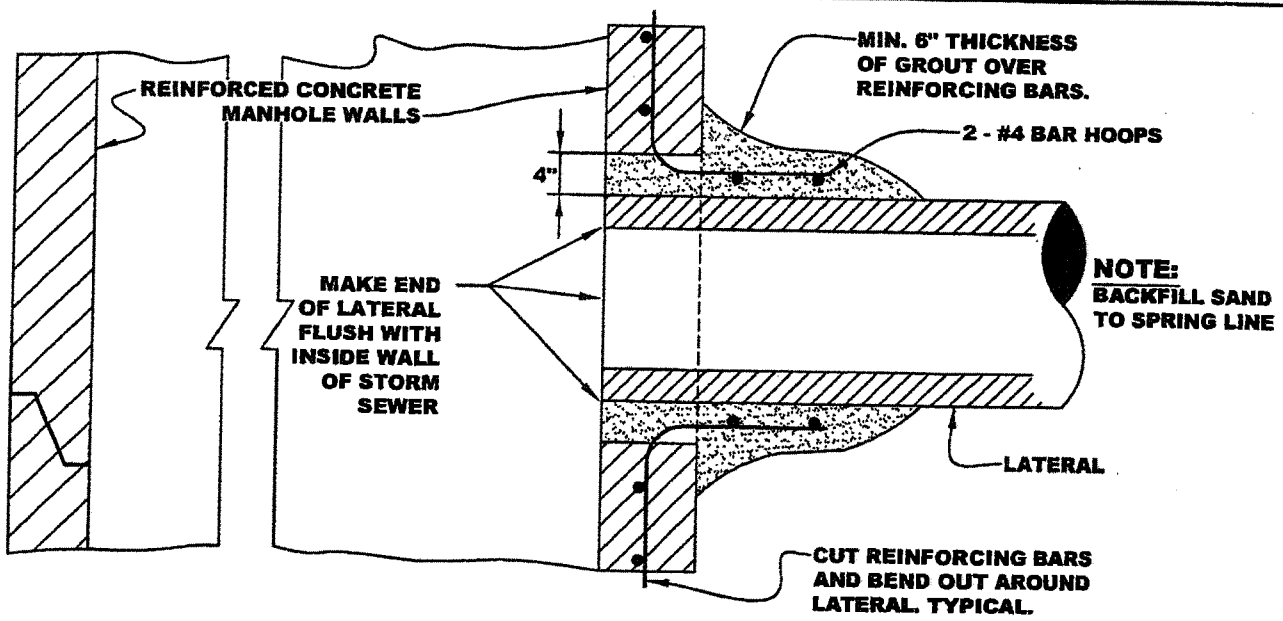

NOTE:
BACKFILL SAND TO SPRING LINE

STANDARD CONNECTION TO MANHOLE WALLS

NO SCALE

STANDARD CONNECTION TO MANHOLE WALLS, AND REINFORCED CONCRETE PIPE	APPROVED BY:	
	DATE : JUNE 30, 2006	DWG. 14A

2006 STANDARD DETAILS

NOTE:

1. CONNECTION TO SEWER MAIN SHALL BE MADE USING A FACTORY "WYE" CUT INTO MAIN. SADDLE CONNECTIONS ARE NOT PERMITTED.

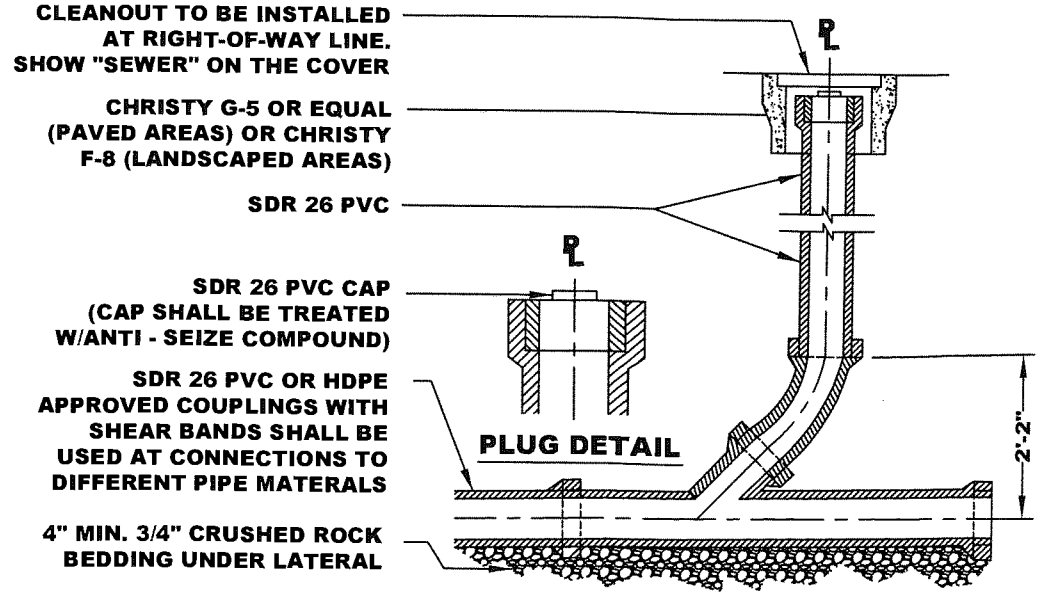

CLEANOUT
N.T.S

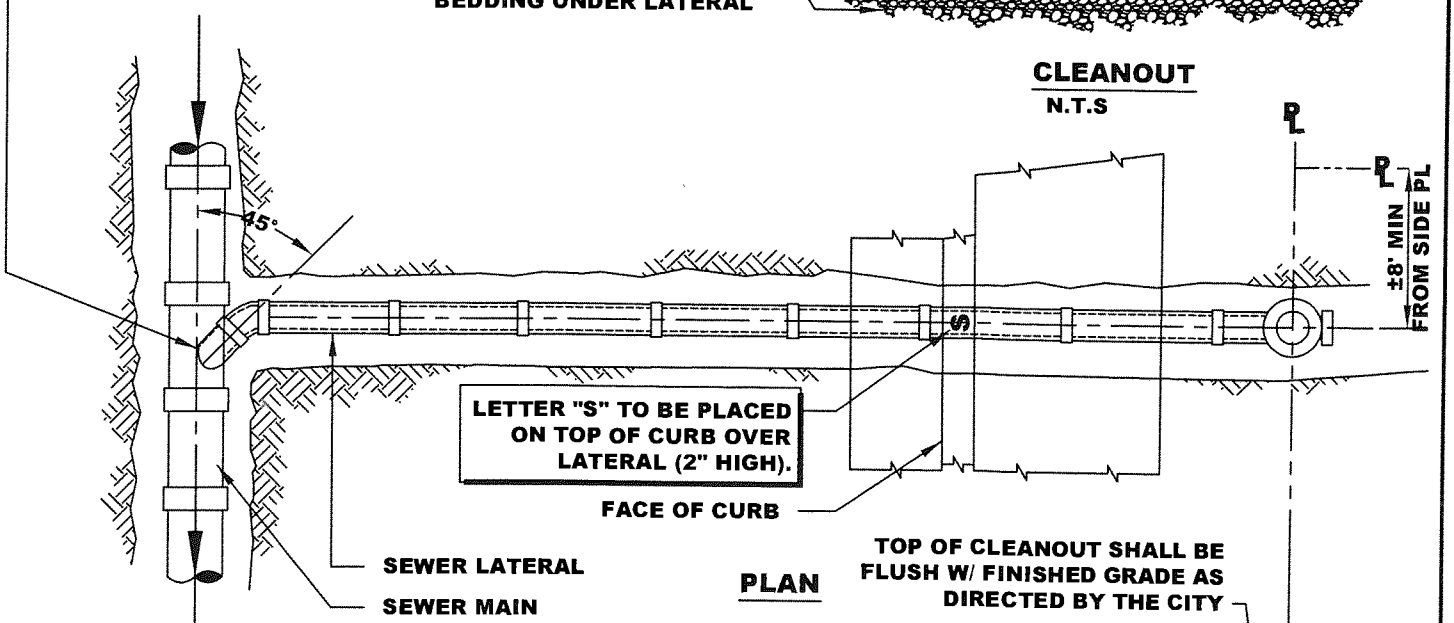

PLAN

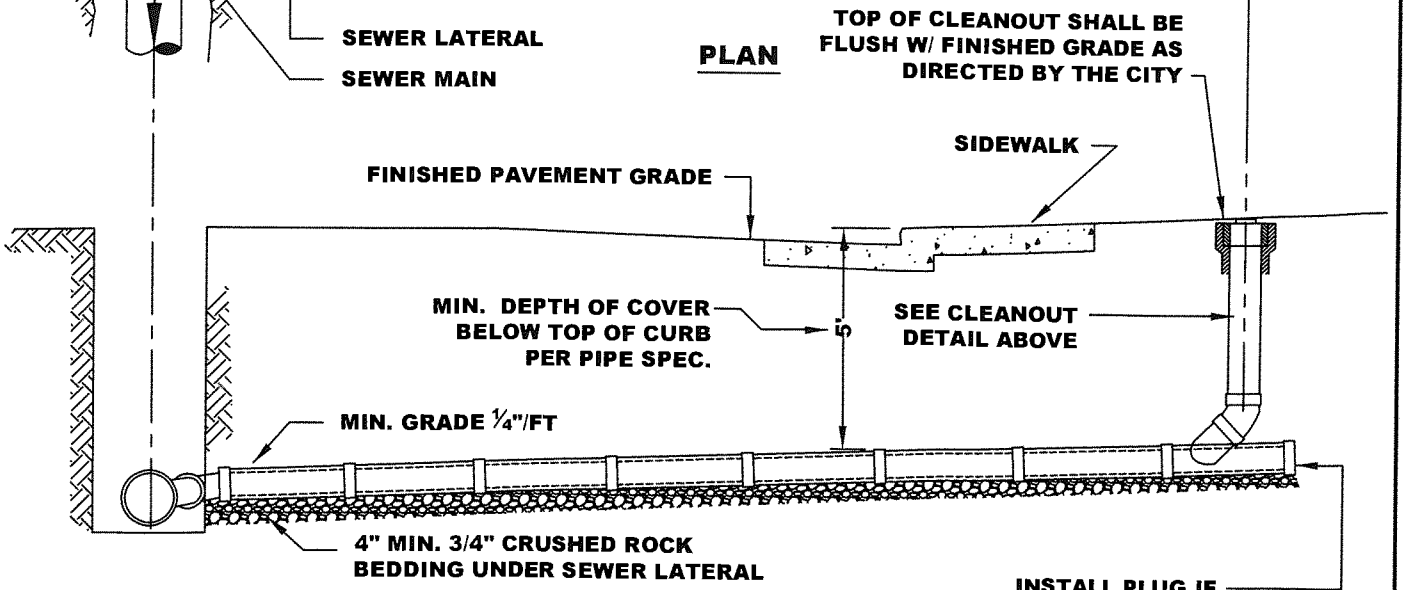

ELEVATION

SEWER LATERAL	Sunnyvale APPROVED BY:	
	DATE : JUNE 2006 REVISED : NOV 2017	DWG. 15A

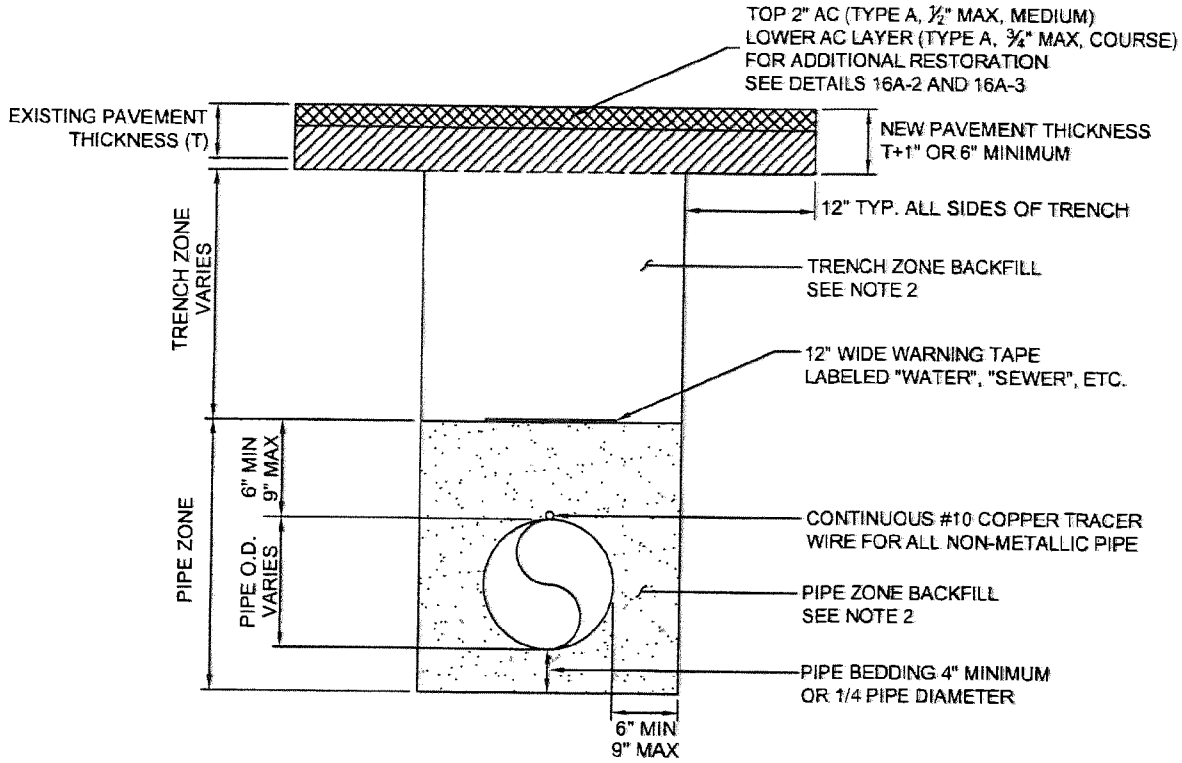

NOTES:

1. WHERE GROUNDWATER IS ENCOUNTERED IN THE PIPE ZONE, PIPE ZONE BACKFILL SHALL BE ENVELOPED WITH MIRAFI 140N GEOTEXTILE OR EQUAL OR AS REQUIRED BY THE ENGINEER. A MINIMUM OF 12" OVERLAP IS REQUIRED.

2. TRENCH BACKFILL AND RELATIVE COMPACTION (RC) SHALL BE AS FOLLOWS:

BACKFILL ZONE	WATER & RECYCLED WATER PIPES	SEWER & STORM DRAIN PIPES
TRENCH ZONE (ROADWAY)	AB CLASS 2 (95% RC)	AB CLASS 2 (95% RC)
TRENCH ZONE (UNPAVED)	NATIVE MATERIAL (90% RC)	NATIVE MATERIAL (90% RC)
PIPE ZONE INCLUDING BEDDING	SAND	¾" CRUSHED ROCK

3. CONTRACTOR/PERMITEE SHALL PAY FOR ALL REQUIRED COMPACTION TESTS.

4. SAND SHALL BE FREE FROM ORGANIC MATTER AND CLAY WITH A MINIMUM SAND EQUIVALENT OF 70 AND A SIEVE GRADATION BY WEIGHT AS FOLLOWS:

SIEVE SIZE	% PASSING
NO. 4	100
NO. 8	75-100
NO. 16	55-100
NO. 30	30-95
NO. 50	10-75
NO. 100	2-15
NO. 200	0-5

5. ¾" CRUSHED ROCK SHALL BE CLEAN AND FREE OF DELETERIOUS SUBSTANCES. ROCK SHALL BE PLACED IN 6" LIFTS AND CONSOLIDATED TIGHTLY.

6. UPON APPROVAL OF THE ENGINEER, CONTROLLED DENSITY FILL (CDF) MAY BE USED IN LIEU OF AB CLASS 2. THE DESIGN FOR CDF SHALL MEET THE FOLLOWING REQUIREMENTS:

CEMENT	50-100 LB/CU.YD
FLY ASH, CLASS F	10-2000 LB/CU.YD
FINE AGGREGATE	2600-3100 LB/CU.YD
WATER	325-580 LB/CU.YD
STRENGTH @ 28 DAYS	50-100 PSI

7. THE BOTTOM OF EACH PIPE SECTION WILL BE IN CONTINUOUS CONTACT WITH THE BEDDING. BEDDING SHALL BE REMOVED FROM UNDER PIPE BELLS TO PREVENT SAGGING OR UNNECESSARY STRESS ON THE PIPE.

TYPICAL TRENCH DETAIL

APPROVED BY:

DATE : JULY 8, 2014

DWG. 16A-1

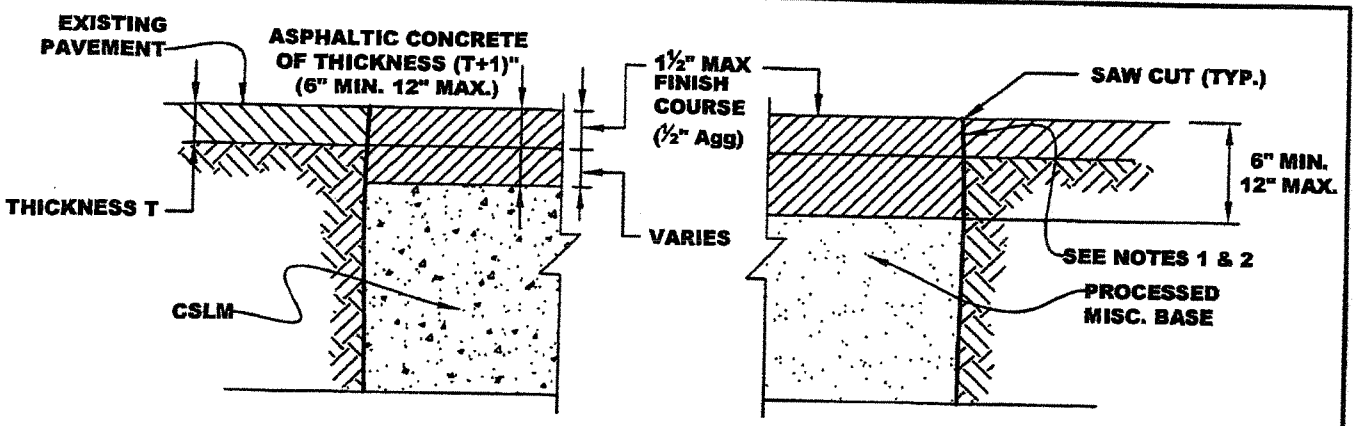

PERMANENT RESTORATION IN EXISTING PAVEMENT SURFACES (SEE NOTE 5)

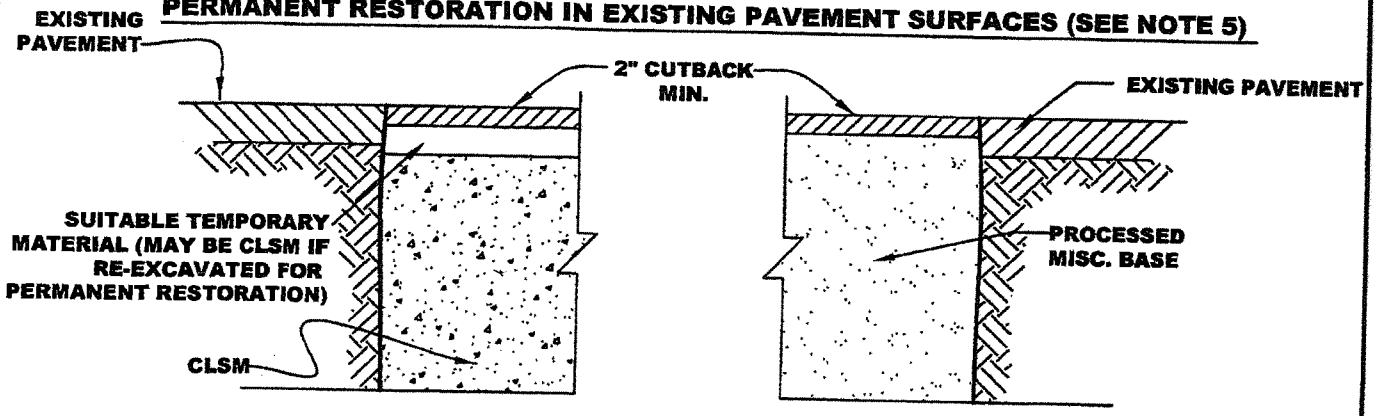

TEMPORARY RESTORATION IN EXISTING PAVEMENT SURFACES

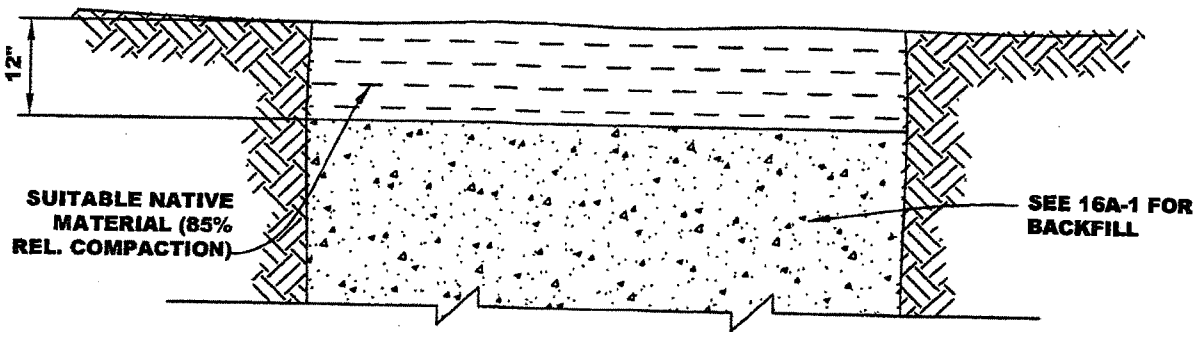

RESTORATION IN EXISTING NON-PAVED SURFACES

NOTES:

1. FOR EXISTING PAVEMENT, SAWCUT EDGE BEFORE EXCAVATION.
2. APPLY TACK COAT TO CUT EDGE OF EXISTING PAVEMENT.
3. FOR PAVED SURFACES FOR WHICH THE PERMANENT SURFACING CANNOT BE INSTALLED BEFORE RETURNING THE PAVEMENT TO USE BY THE PUBLIC, A TEMPORARY SURFACING OF 2" (MIN.) OF CUTBACK SHALL BE INSTALLED, FLUSH WITH THE ADJACENT PAVEMENT, UNTIL SUCH TIME AS THE PERMANENT SURFACING IS INSTALLED. TEMPORARY SURFACING SHALL BE CONSTRUCTED FLUSH WITH THE ADJACENT PAVEMENT AND SHALL BE MAINTAINED FLUSH.
4. TEMPORARY SURFACING SHALL NOT BE USED FOR MORE THAN TWO WEEKS.
5. STD. DETAIL 16A-3. MODIFIES THIS DETAIL IN SOME CASES.

TYPICAL TRENCH SURFACE RESTORATION 1 OF 2	APPROVED BY:	
	DATE : JUNE 30, 2006	DWG. 16A-2

2006 STANDARD DETAILS

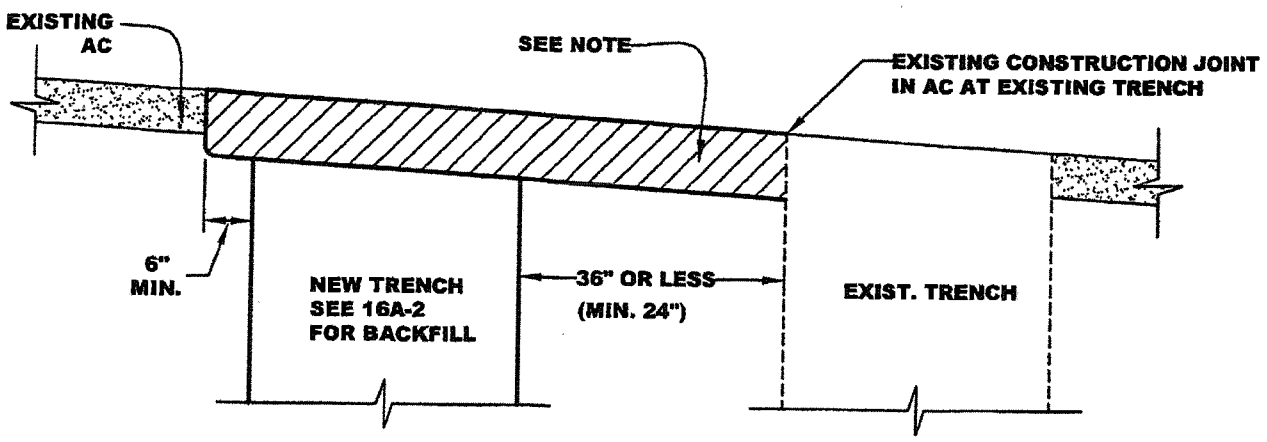

DETAIL 1 FOR TRENCH CONSTRUCTION 36" OR LESS FROM EXISTING TRENCH

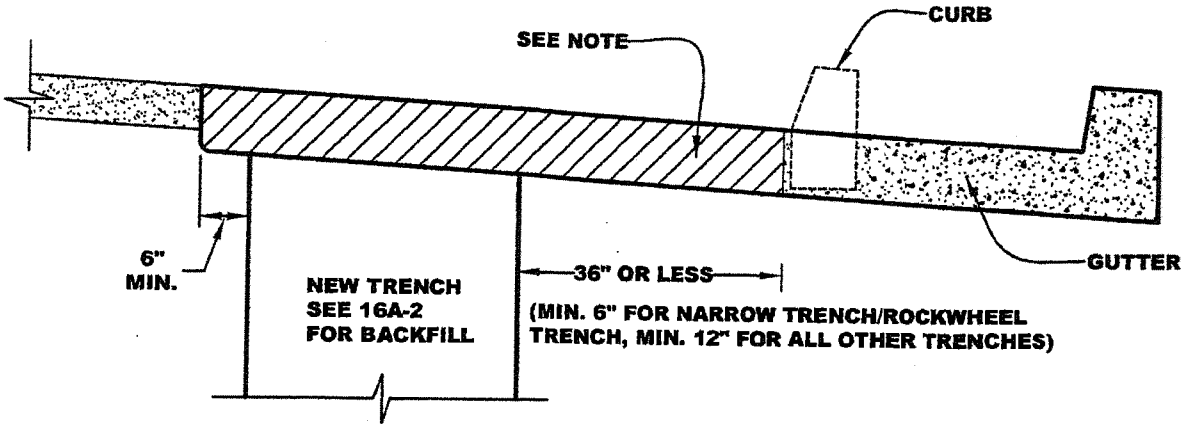

DETAIL 2 FOR TRENCH CONSTRUCTION W/IN 36" OF GUTTER (OR CURB)

NOTE: STD DETAILS 16A-2 & 16A-5 (FOR DIFFERENT TRENCH TYPES) SHOW RESTORED PAVEMENT DETAILS. THIS STD. DETAIL MODIFIES THE WIDTH OF THE PAVEMENT RESTORATION IN CERTAIN CASES

TYPICAL TRENCH SURFACE RESTORATION 2 OF 2	APPROVED BY:	
	DATE : JUNE 30, 2006	DWG. 16A-3

2006 STANDARD DETAILS

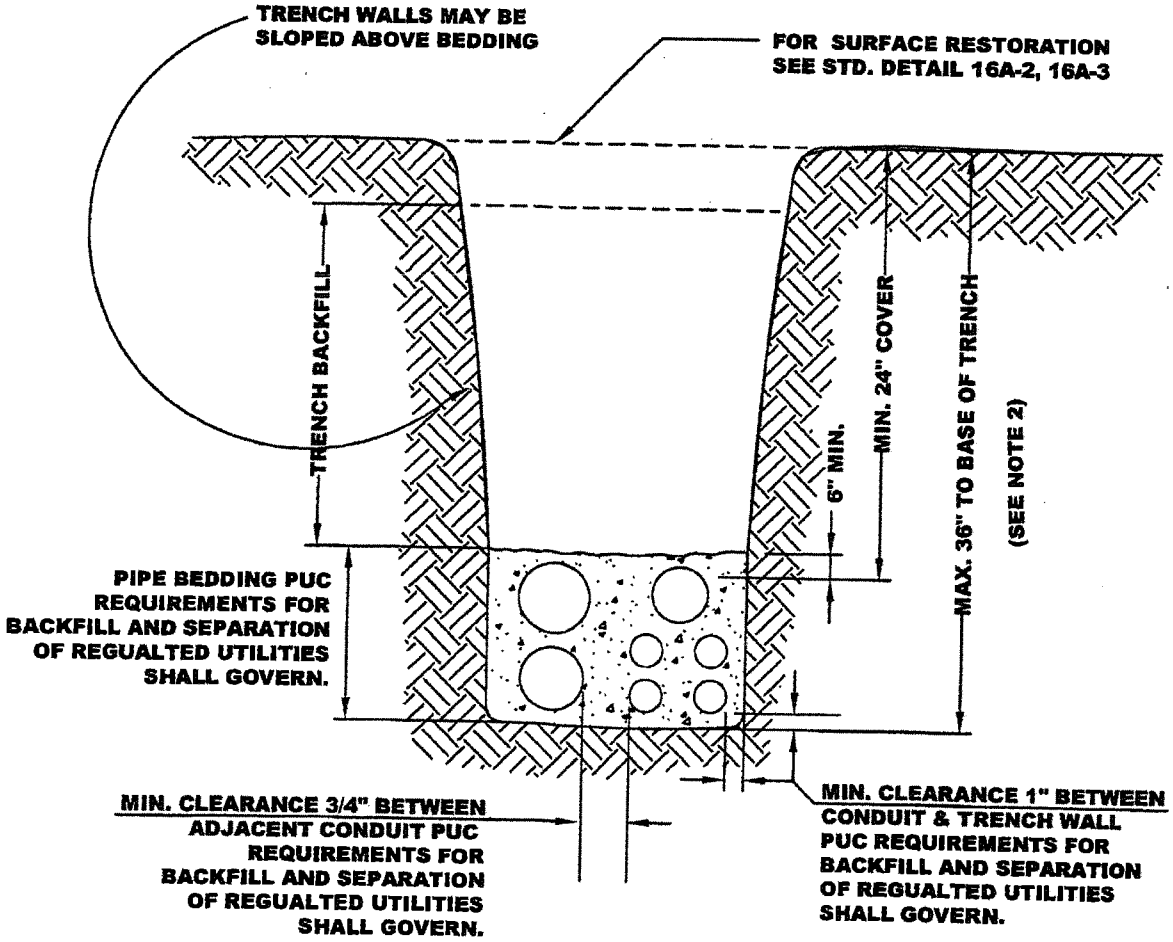

NOTES:

1. THIS DETAIL APPLIES FOR MULTIPLE UTILITY CONDUITS. (JOINT TRENCH)
2. FOR TRENCH DEPTHS GREATER THAN 36", OBTAIN CITY APPROVAL.
3. CONDUIT SHALL BE BEDDED FROM THE BOTTOM OF THE TRENCH TO 6" ABOVE THE UPPERMOST CONDUIT.
4. TRENCH BACKFILL SHALL BE PER 16A-2 OR EITHER CLSM OR PROCESSED MISC. BASE AT THE CONTRACTOR'S OPTION. NATIVE MATERIAL, SAND OR "PEA GRAVEL" TYPE MATERIALS ARE NOT PERMITTED AS BACKFILL.
5. COMPACTION REQUIREMENTS FOR PROCESSED MISC. BASE TRENCH ARE:
   A. 95% RELATIVE COMPACTION WITHIN STREET RIGHT - OF - WAY.
   B. 90% RELATIVE COMPACTION OUTSIDE STREET RIGHT - OF - WAY.

TYPICAL MULTIPLE UTILITY CONDUIT TRENCH SECTION	APPROVED BY:	
	DATE : JUNE 30, 2006	DWG. 16A-4

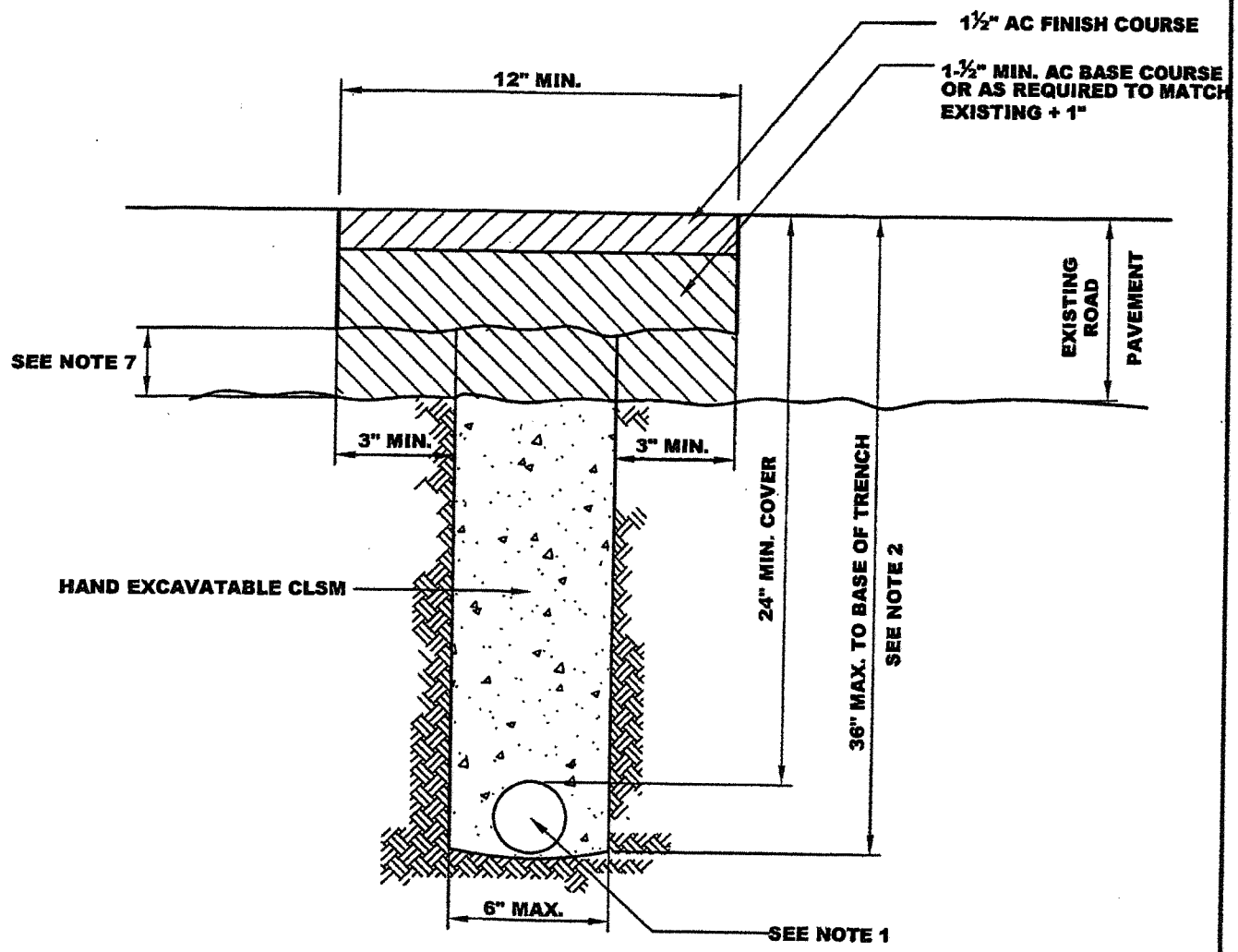

NOTES:

1. SINGLE OR MULTIPLE CONDUITS MAY BE USED. MINIMUM LATERAL CLEARANCE SHALL BE 1" BETWEEN CONDUITS OR CONDUITS/WALL OF TRENCH. MINIMUM VERTICAL CLEARANCE BETWEEN CONDUITS SHALL BE 3/4" . CONDUIT(S) MAY REST ON THE BOTTOM OF THE TRENCH.
2. FOR TRENCH DEPTHS GREATER THAN 36", OBTAIN CITY APPROVAL.
3. THE TRENCH SHALL BE BACKFILLED WITH HAND EXCAVATABLE CONTROLLED LOW STRENGTH MATERIAL (CLSM).
4. CLSM SHALL HAVE A MIN. / MAX. 28 DAY COMPRESSIVE STRENGTH OF 100 PSI / 200 PSI RESPECTIVELY.
5. 4" BASE ASPHALTIC CONCRETE SHALL BE 3/4" MAXIMUM (MEDIUM).
6. 1½" SURFACE ASPHALTIC CONCRETE SHALL BE 1/2" MAXIMUM (MEDIUM)
7. SEE STD. DETAIL 16A - 3 (SHEET 2 OF 2) WHICH MAY MODIFY THE PAVEMENT RESTORATION DETAIL, DEPENDING ON LOCATION OF THE TRENCH RELATIVE TO OTHER FEATURES.

TYPICAL NARROW TRENCH/ROCKWHEEL UTILITY CONDUIT TRENCH DETAIL	APPROVED BY:	
	DATE : JUNE 30, 2006	DWG. 16A-5

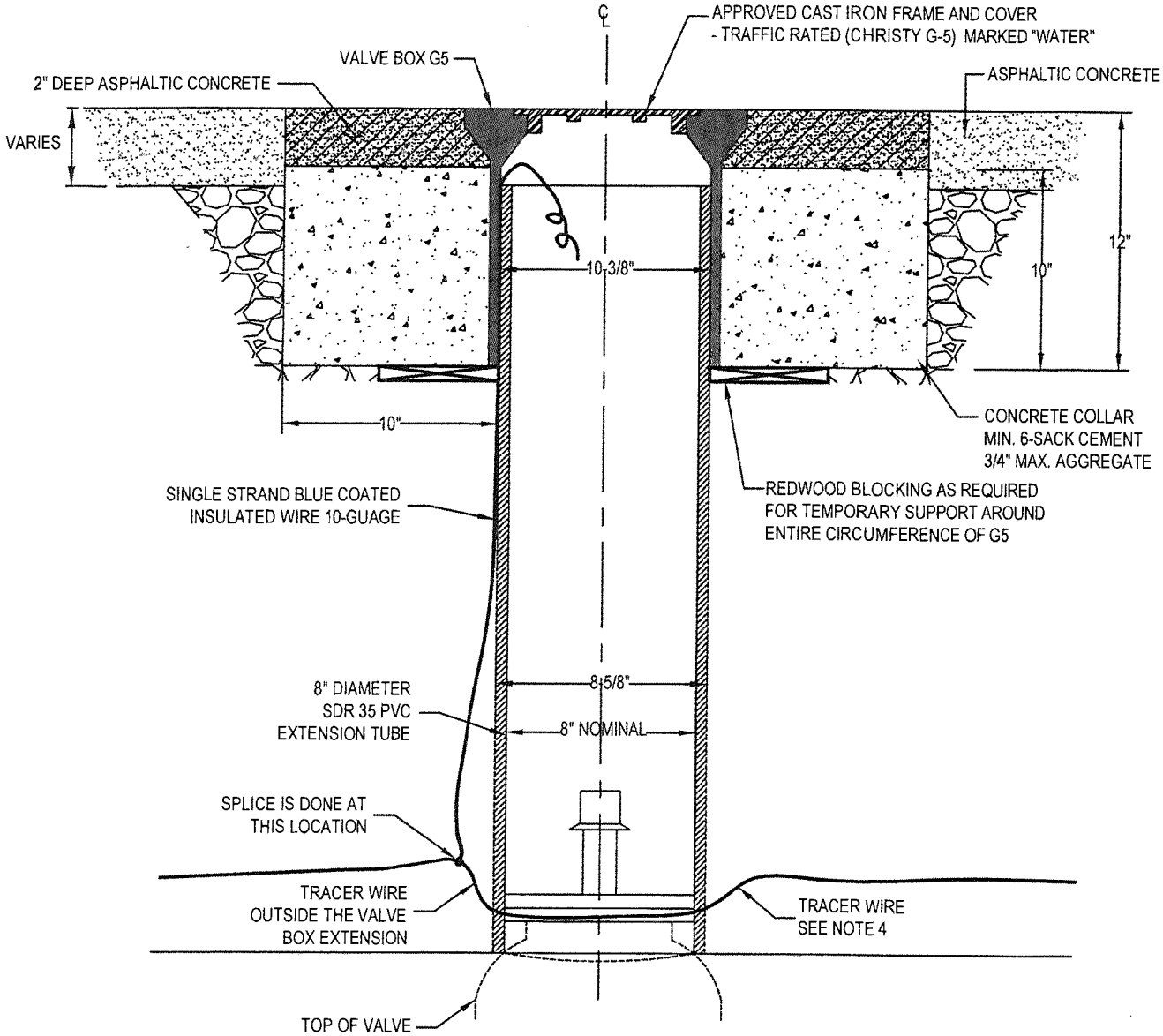

NOTES:

1. PLACE EXTENSION KEY INSIDE VALVE BOX EXTENSION WHEN VALVE KEY DEPTH IS GREATER THAN 5'-0"
2. LID CASTING FOR POTABLE WATER SYSTEM SHALL INCLUDE DESIGNATION "WATER". COVERS MUST BE G-5 CHRISTY BOX.
3. LID CASTING FOR RECYCLED WATER SYSTEM SHALL INCLUDE DESIGNATION "RECLAIMED WATER" PAINTED PURPLE AND 1" LETTERS "RW".
4. SEE CITY STD DETAIL FOR THE INSTALLATION OF TRACER WIRE.

WATER VALVE BOX INSTALLATION	APPROVED BY:	
	DATE: JUNE 30, 2006 **REVISED: MAY 2015**	DWG. **1B**

FIRE HYDRANT ASSEMBLY

HYDRANT NOTES:

1. EXTRA WIDE MONOLITHIC SIDEWALK. X = 24" (FACE OF CURB TO CENTER OF HYDRANT) (Y DOES NOT APPLY) PROVIDED MIN CLEAR WIDTH BETWEEN BACK OF HYDRANT AND BACK OF WALK IS 4'-0"F. THIS MIN WIDTH CANNOT BE ACHIEVED, SEE NOTE 3.
2. NON MONOLITHIC SIDEWALK. X = 24" (FACE OF CURB TO CENTER OF HYDRANT) (Y DOES NOT APPLY)
3. MONOLITHIC SIDEWALK. Y = 12" (BACK OF SIDEWALK TO CENTER OF HYDRANT) (X DOES NOT APPLY)
4. NO SIDEWALK. X = 6'-6" (FACE OF CURB TO CENTER OF HYDRANT) (Y DOES NOT APPLY)
5. SEE DETAIL BELOW FOR THE INSTALLATION OF TRACER WIRE.

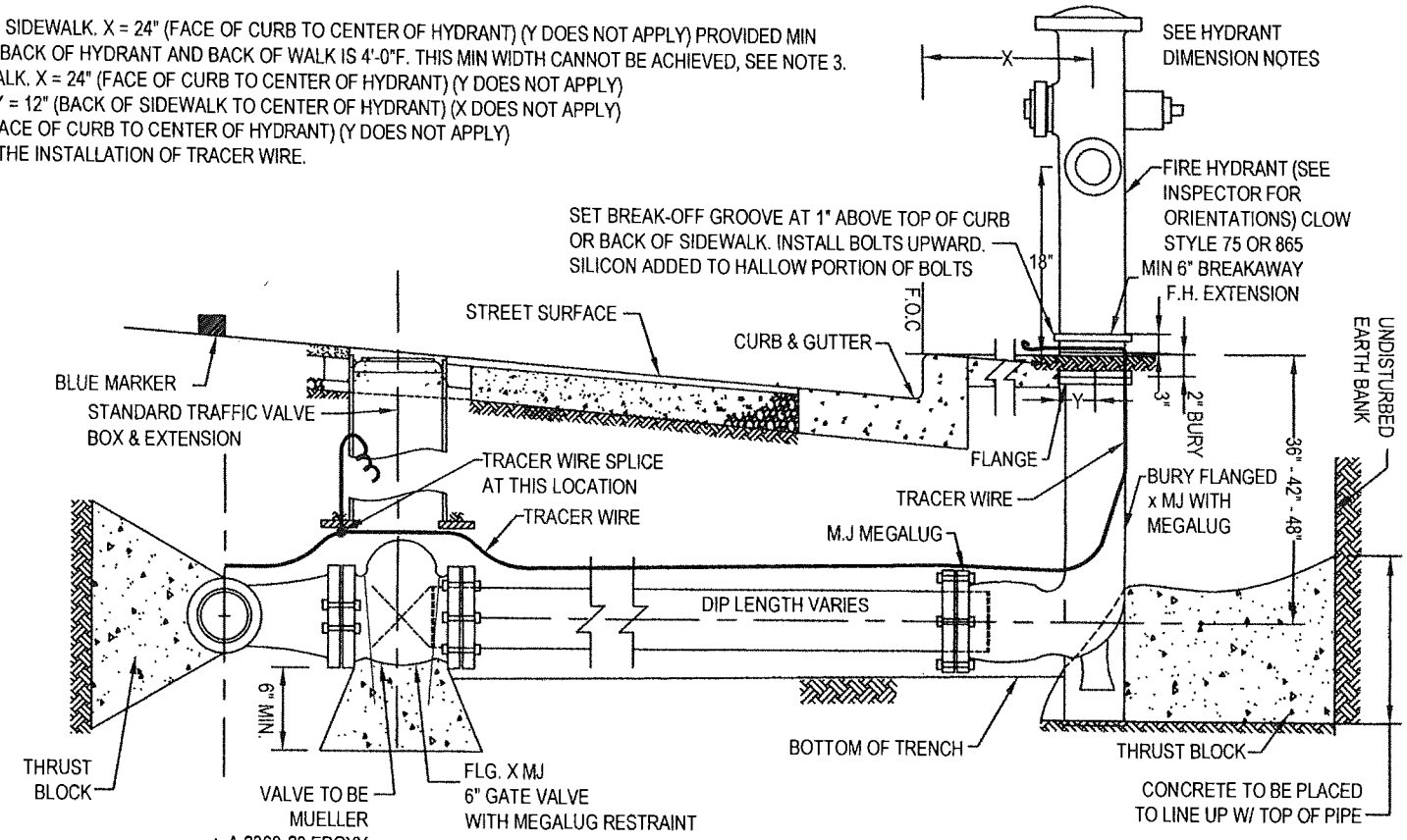

CURB DETAIL AT FIRE HYDRANT LOCATIONS

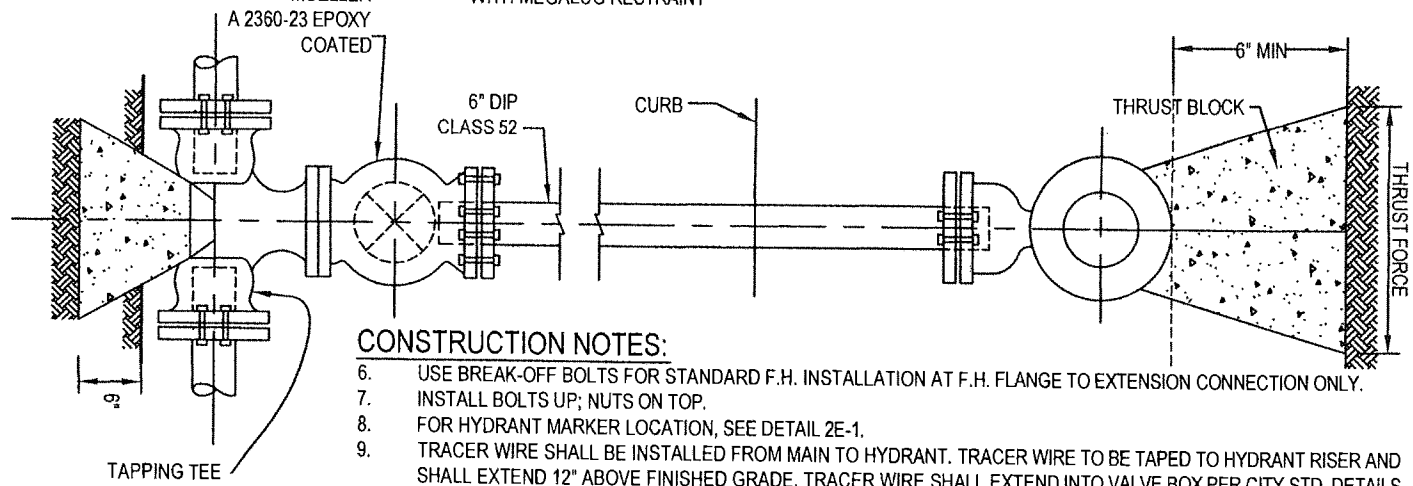

CONSTRUCTION NOTES:

6. USE BREAK-OFF BOLTS FOR STANDARD F.H. INSTALLATION AT F.H. FLANGE TO EXTENSION CONNECTION ONLY.
7. INSTALL BOLTS UP; NUTS ON TOP.
8. FOR HYDRANT MARKER LOCATION, SEE DETAIL 2E-1.
9. TRACER WIRE SHALL BE INSTALLED FROM MAIN TO HYDRANT. TRACER WIRE TO BE TAPED TO HYDRANT RISER AND SHALL EXTEND 12" ABOVE FINISHED GRADE. TRACER WIRE SHALL EXTEND INTO VALVE BOX PER CITY STD. DETAILS.
10. CONCRETE SHALL NOT EXTEND BEYOND FACE OF BELL AND JOINTS. BOLTS / NUTS TO REMAIN FREE OF CONCRETE.
11. ALL BELOW GRADE DIP SHALL BE POLY WRAPPED; ABOVE GRADE SHALL BE PAINTED.
12. ALL JOINTS ARE TO BE EXPOXY COATED MEGA-LUG.

DATE: JUNE 30, 2006
REVISED: MAY 2015

APPROVED BY:

DWG. 2B

HYDRANT LOCATION INFORMATION

HYDRANT LOCATIONS

REFER TO DETAIL 2B

③ HYDRANT REQUIREMENTS

CLOW/RICH NO. 75

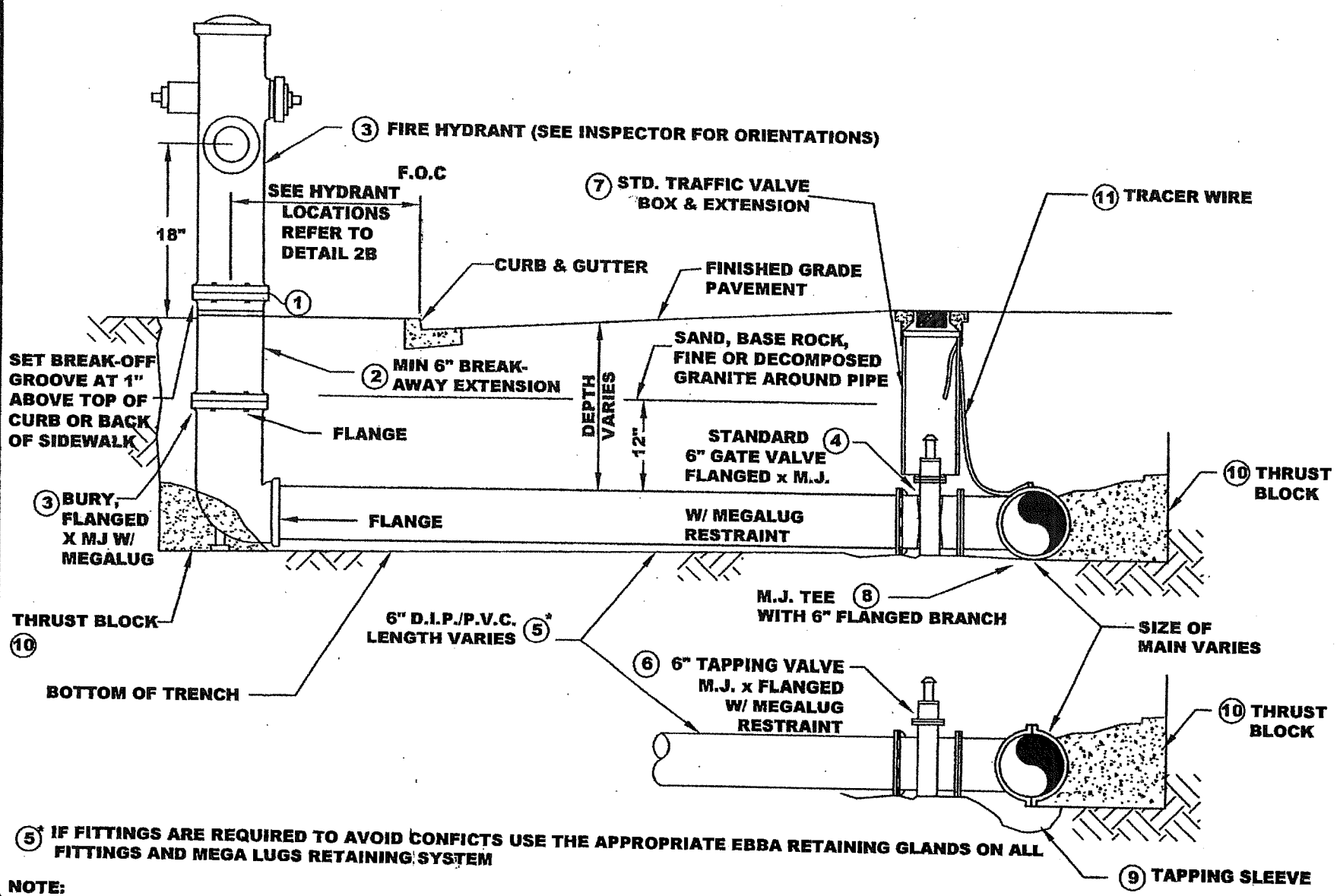

⑤* IF FITTINGS ARE REQUIRED TO AVOID CONFICTS USE THE APPROPRIATE EBBA RETAINING GLANDS ON ALL FITTINGS AND MEGA LUGS RETAINING SYSTEM

NOTE:

1. USE BREAK-OFF BOLTS FOR STANDARD F.H. INSTALLATION AT F.H. FLANGE TO EXTENSION CONNECTION ONLY.
2. IF BREAK-OFF VALVE REQUIRED PER PLANS DO NOT USE BREAK-OFF BOLTS.
3. INSTALL BOLTS UP; NUTS DOWN
4. FOR HYDRANT MARKER LOCATION, SEE DETAIL 2E-1

DATE : JUNE 30, 2006
REVISED : JUNE, 2007

APPROVED BY:

DWG. 2B-2

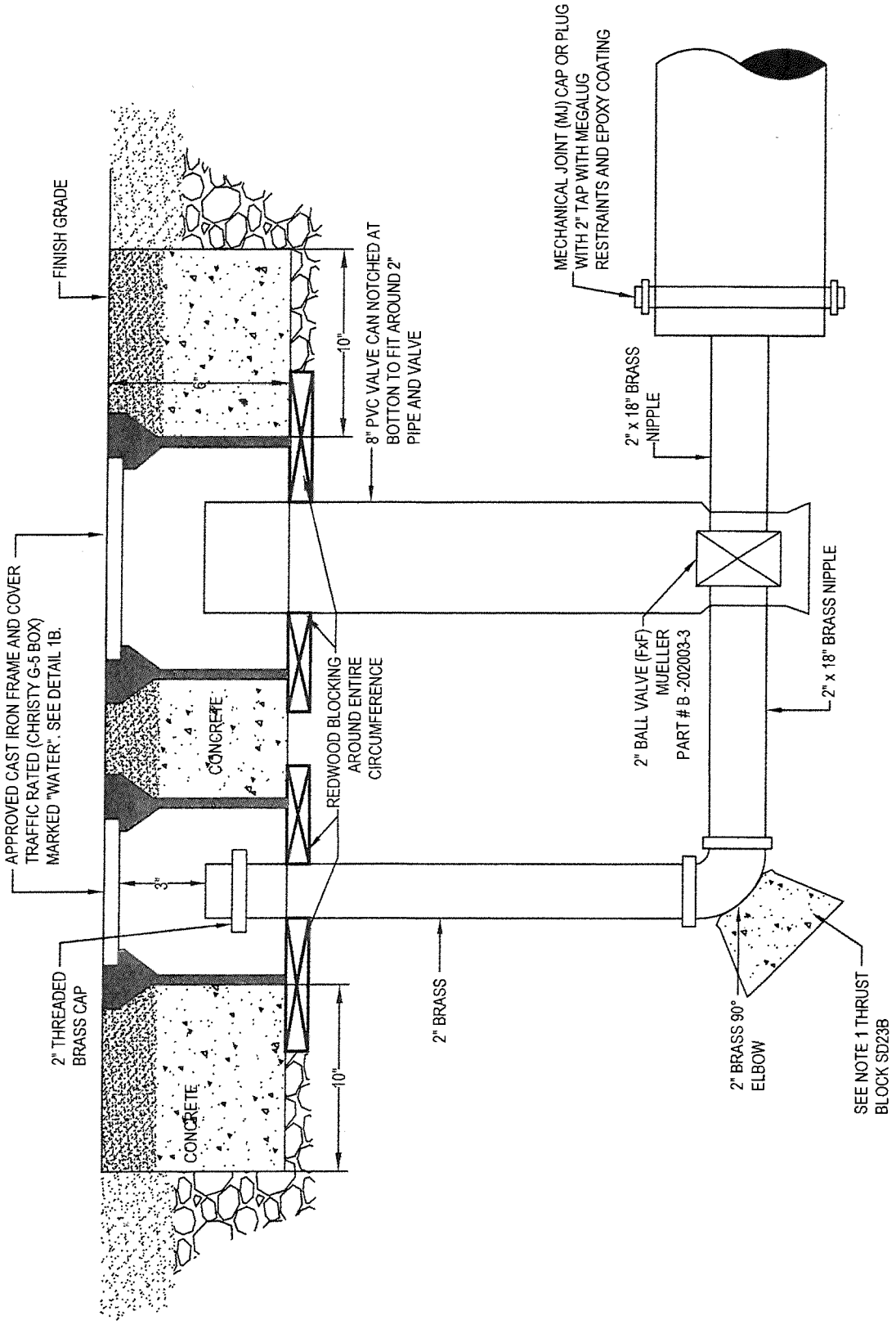

NOTES:

1. BLOW-OFF ASSEMBLY AND END OF WATER MAIN MUST HAVE A KICKER / THRUST BLOCK INSTALLED NOT TO COVER PIPE THREADS NUTS OR BOLTS.

STANDARD BLOW OFF	APPROVED BY:	
	DATE : JUNE 30, 2006 **REVISED: MAY 2015**	DWG. **3B**

STANDARD AIR-RELIEF VALVES 1" & 2"

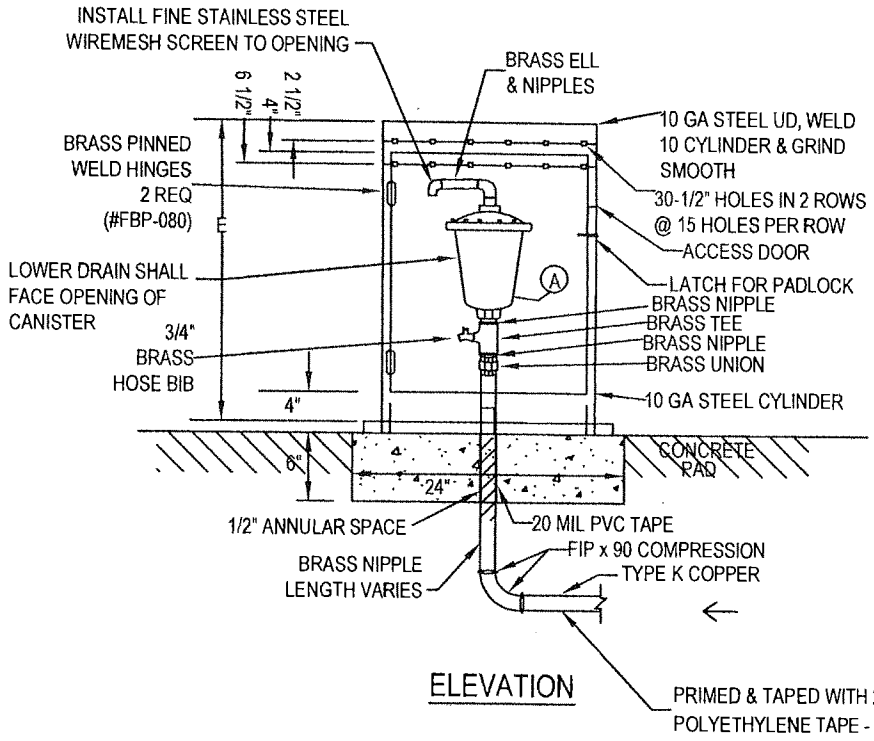

ELEVATION

MATERIAL

THE TYPE "K" COPPER TUBING SHALL AT ALL POINTS BE RISING FROM THE CORPORATION STOP TO THE AIR & VACUUM RELIEF VALVE.

(A) CRISPIN UNIVERSAL AIR & VACUUM RELIEF VALVE

(B) MUELLER BALL VALVE / B202000 OR FORD EQUIV.

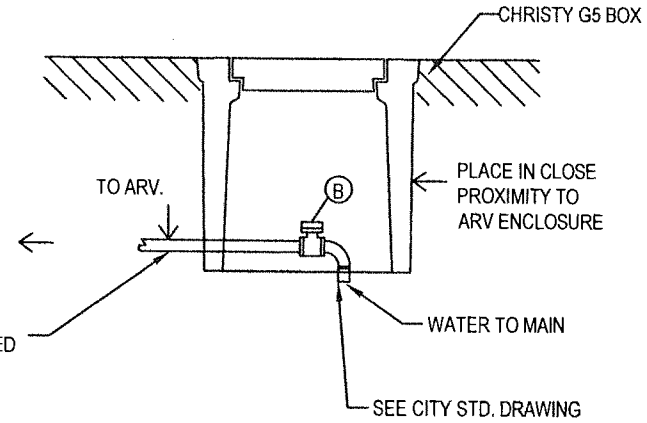

SIZING FOR AIR VALVE COVER			
VALVE SIZE	PART #	A(DIAMETER)	B (HEIGHT)
1" & 2"	VC-316	18"	30"

NOTES:

1. PIPELINE PRODUCTS PART #VC316D
2. POWDER COATED DARK GREEN
3. ANY DEVIATION FROM STANDARD DETAILS MUST BE APPROVED BY PUBLIC WORKS / FIELD SERVICES / SENIOR LEADER

NOTES:

1. CONNECTION TO WATER MAIN SHALL CONFORM TO STANDARD DETAILS AND SPECIFICATIONS.
2. USE SAME DIAMETER SEAMLESS COPPER TUBING AS REQUIRED SIZE OF AIR & VACUUM RELIEF VALVE.
3. AIR RELIEF VALVE AND CURB STOP SHALL BE PLACED IN BOX SUCH THAT THE WALL OF THE BOX WILL NOT INTERFERE WITH THE INSTALLATION AND REMOVAL OF THE VALVES.

AUTOMATIC AIR & VACUUM VALVE

DATE : JUNE 30, 2006
REVISED: MAY 2015

APPROVED BY:

DWG. 3B-1

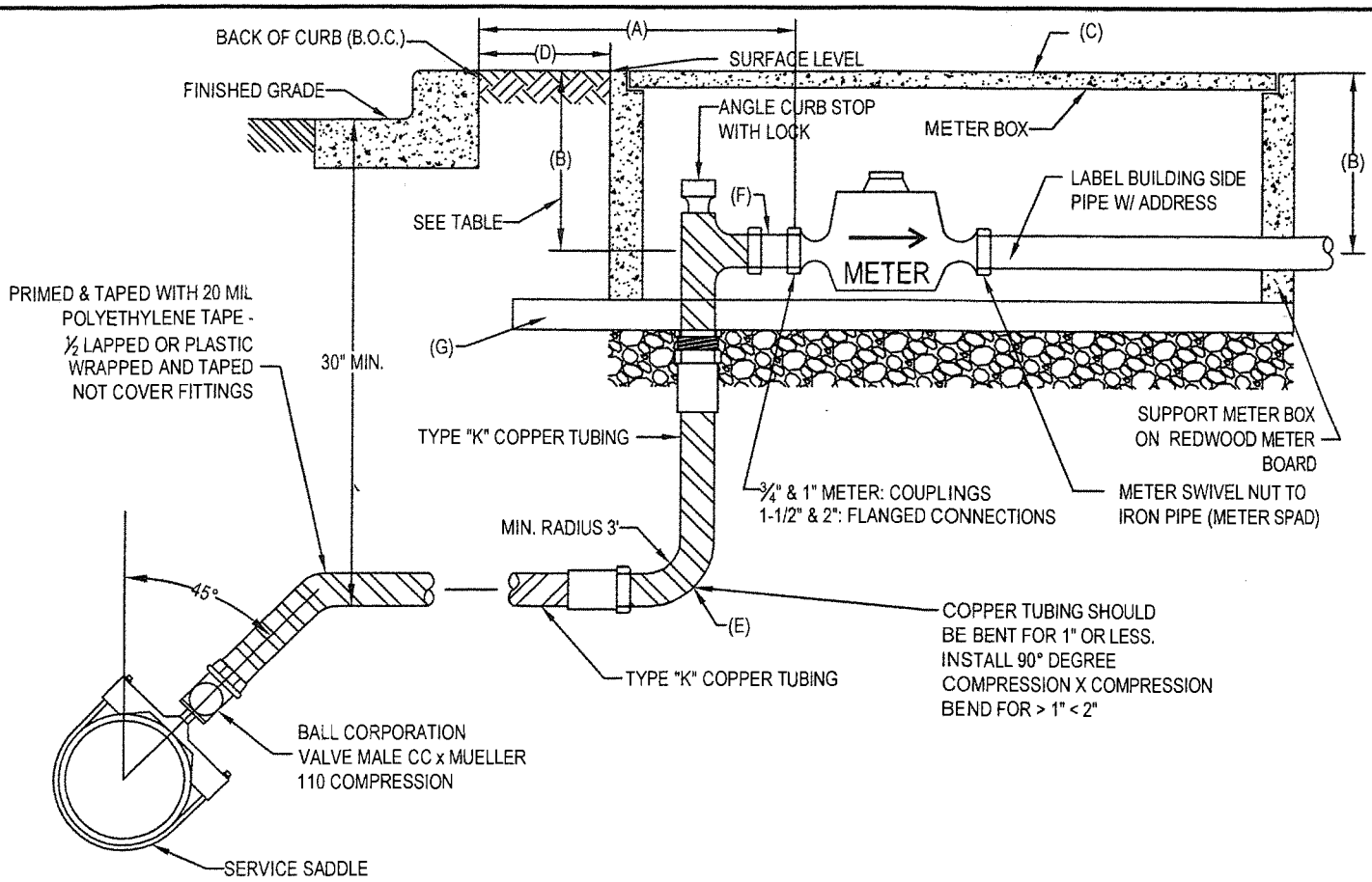

	POINT A	POINT B	POINT C	POINT D	POINT E	POINT F	POINT G
SIZE	B.O.C. TO FACE OF METER (INCHES)	CENTERLINE OF FLOW GRADE (INCHES)	ROTOCAST METER BOX W/HINGED READING LID W " x L " x D " (INCHES)	B.O.C. TO FACE OF METER BOX (INCHES)	90 DEGREE COMPRESSION x COMPRESSION	1 INCH M x ¾ INCH F METER BUSHING	METER BOARDS MUST COVER ENTIRE BOX BASE NOT TO EXCEED 6" HIGH
⅝"	8"	11"	10 x 15 x 12	3"		YES	YES
¾"	8"	11"	10 x 15 x 12	3"		YES	YES
1"	8"	10"	10 x 26.6 x 12	3"			YES
1½"	9"	11"	13 x 24 x 12	3"	YES		YES
2"	12"	12"	17 x 30 x 12	3"	YES		YES

NOTES:

1. ANGLED METER BALL, LOCKING TYPE VALVE COMPRESSION x METER THREAD SHALL BE USED. IF REPLACING AN EXISTING PIPE AND A STRAIGHT METER VALVE IS USED RATHER THAN AN ANGLED METER VALVE, A 90 DEGREE COMPRESSION FITTING MUST BE USED AND ACCOUNTED FOR TO MAKE THE NECESSARY BEND AT THE METER BOX.
2. SERVICE SADDLE SHALL BE BRASS, EPOXY OR NYLON COATED WITH BRASS OR STAINLESS STEEL STRAPS AND BOLTS TAPERED THREAD OUTLET AND SPECIFIED FOR THE TYPE OF MAIN BEING TAPPED.
3. CORPORATION VALVE AND METER VALVE SHALL BE ¼ INCH TURN BALL TYPE. METER VALVE SHALL BE LOCKING TYPE. CORPORATION VALVE SHALL BE TAPERED THREAD x COMPRESSION. MALE CC x MUELLER 110.
4. 1 INCH COPPER PIPE SHALL REMAIN AS ONE PIECE WITHOUT BREAKS SPLICING IS NOT PERMITTED. 1 ½ AND 2 INCH PIPE SHALL HAVE A 90 DEGREE COMPRESSION BY COMPRESSION TO BRING THE PIPE VERTICAL.
5. ALL COPPER PIPES SHALL ONLY BE BENT WITH A PIPE BENDER.
6. NO COPPER OR BRASS, PIPE OR FITTING SHALL BE PERMITTED TO CONTACT STEEL AT ANY POINT.
7. SEE ABOVE CHART FOR APPROVED BOX DIMENSIONS AND OTHER DRAWING MEASUREMENTS.

METER BOX AND VAULT SPECIFICATIONS UP TO 2" METERS

APPROVED BY:

DATE : JUNE 2006

REVISED : APRIL 2016

DWG. 4B

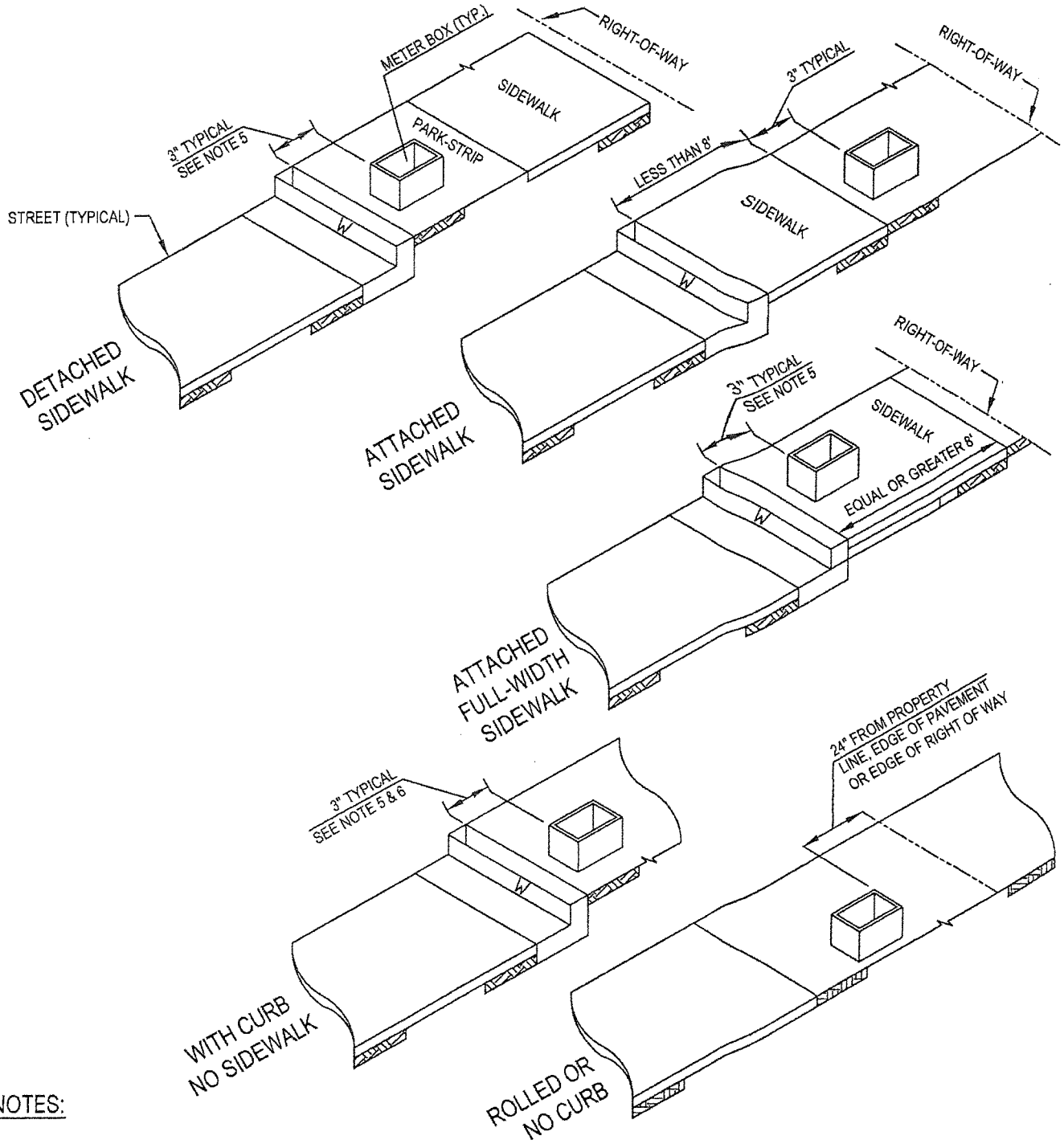

NOTES:

1. REFER TO CITY STANDARD SPECIFICATIONS WHERE APPLICABLE.
2. STAMP OR CHISEL 2" HIGH 'W' IN CURB FACE TO IDENTIFY POTABLE WATER SERVICE LOCATION.
3. STAMP OR CHISEL A 2" HIGH 'RW' IN CURB FACE TO IDENTIFY RECYCLED WATER SERVICE LOCATION.
4. ROLLED CURB METER BOX AND LID SHALL BE TRAFFIC RATED.
5. METER BOX SHALL BE INSTALLED 3" FROM THE BACK OF CURB.
6. AN EASEMENT MAY BE NEEDED DEPENDING ON LOCATION OF METER BOX.
7. METER BOXES INSTALLED FOR THE USE OF RECYCLED WATER SHALL BE IDENTIFIED AS DESCRIBED IN CITY STANDARD SPECIFICATIONS.
8. MATERIALS SHALL BE SELECTED FORM THE CITY'S APPROVED MATERIALS LIST.
9. METER BOXES INSTALLED WHERE A ROLLED CURB IS OR WITHIN 5 FEET OF DRIVEWAY SHALL BE TRAFFIC RATED BOTH BOX AND LID.

METER BOX AND VAULT SPECIFICATIONS UP TO 2" METERS	APPROVED BY:	
	DATE : JUNE 30, 2006 **REVISED: DECEMBER 2015**	DWG. **4B-1**

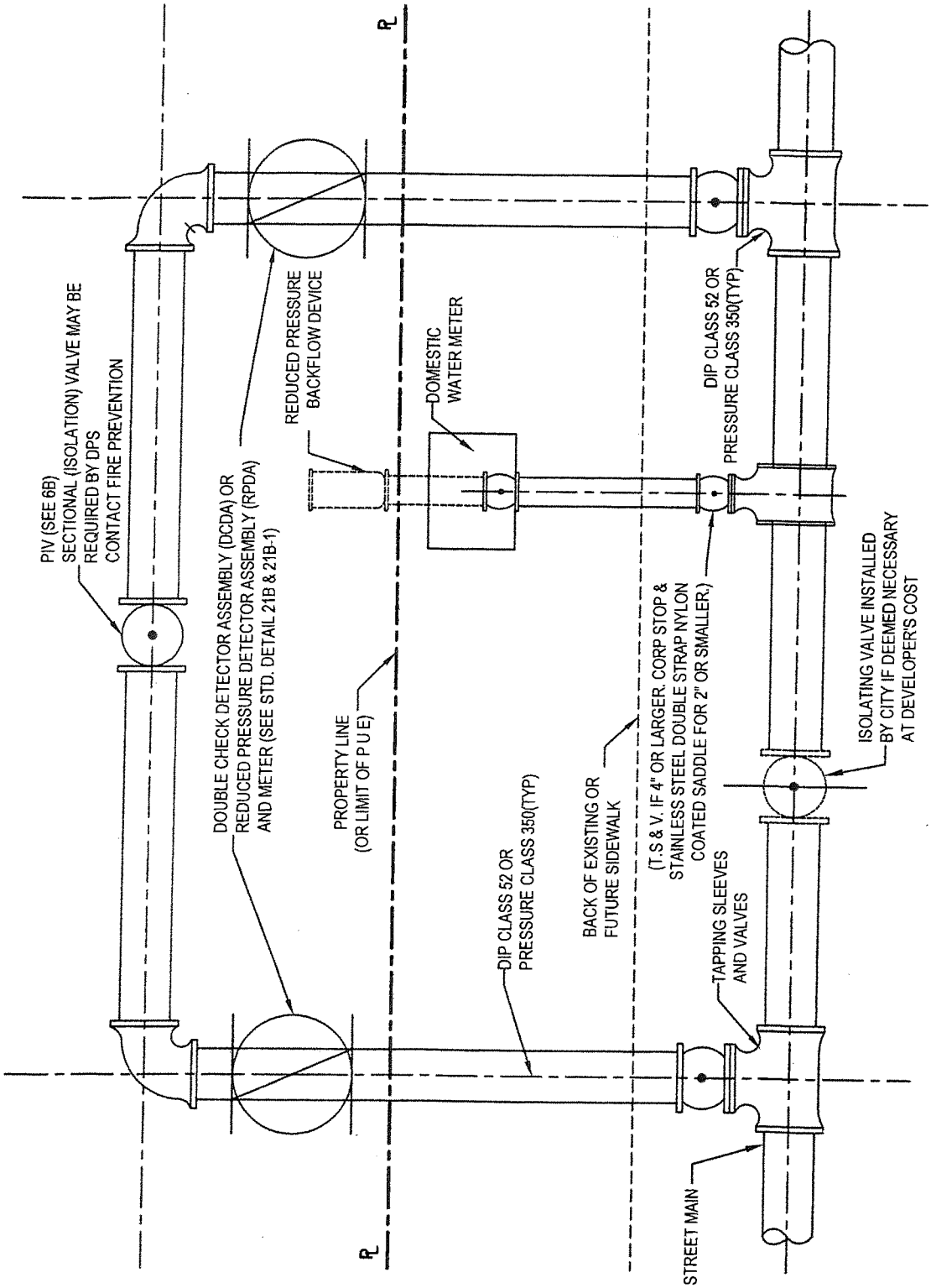

NOTE:

AN APPROVED BACKFLOW DEVICE REQUIRED ON THE FIRE LOOP AND ON THE DOMESTIC WATER SYSTEM

FIRE SERVICE LOOP WITH SEPERATE DOMESTIC WATER SERVICE

APPROVED BY:

DATE : JUNE 30, 2006

REVISED: SEPTEMBER 2014

5B

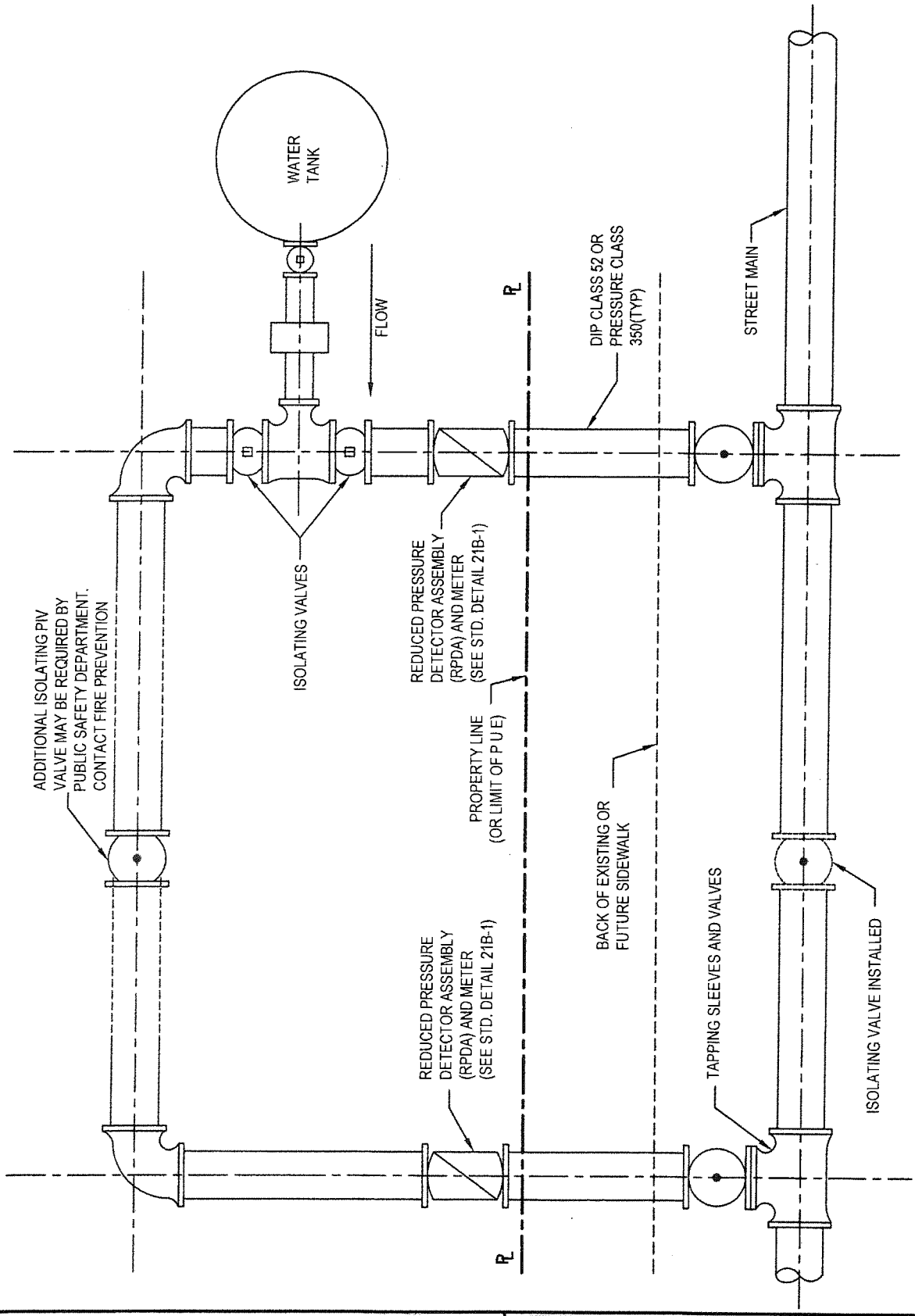

FIRE SERVICE LOOP WITH FIRE PUMP AND TANK

APPROVED BY:

DATE : JUNE 30, 2006
REVISED: SEPTEMBER 2014

6B

FIRE AND DOMESTIC SERVICE FROM A SINGLE CONNECTION

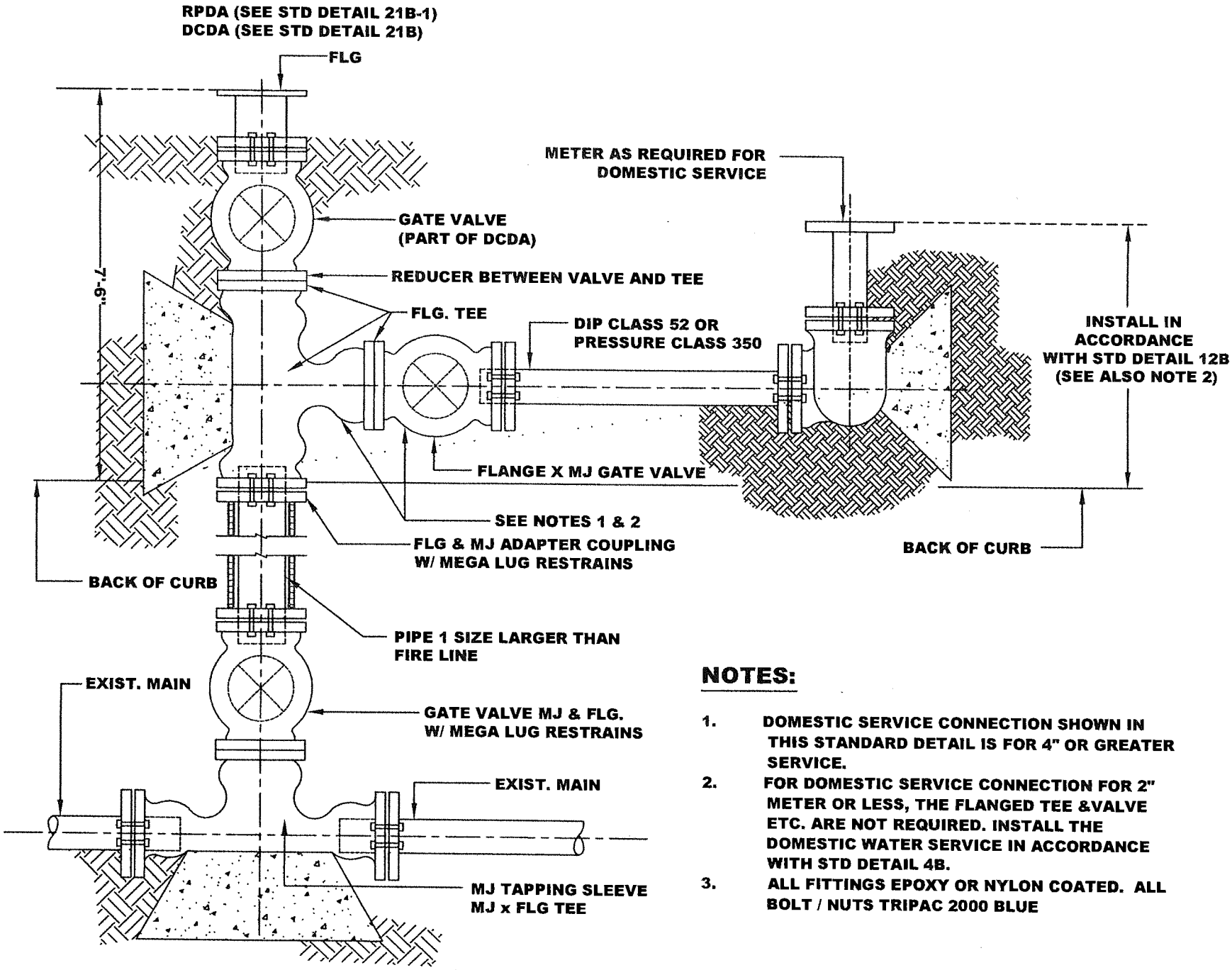

NOTES:

1. DOMESTIC SERVICE CONNECTION SHOWN IN THIS STANDARD DETAIL IS FOR 4" OR GREATER SERVICE.
2. FOR DOMESTIC SERVICE CONNECTION FOR 2" METER OR LESS, THE FLANGED TEE &VALVE ETC. ARE NOT REQUIRED. INSTALL THE DOMESTIC WATER SERVICE IN ACCORDANCE WITH STD DETAIL 4B.
3. ALL FITTINGS EPOXY OR NYLON COATED. ALL BOLT / NUTS TRIPAC 2000 BLUE

(APPROVAL OF CITY ENGINEER REQUIRED)

DATE: JUNE 30, 2006
REVISED: MAY 2015

APPROVED BY:

8B

FIRE AND DOMESTIC COMBINED SERVICE LOOP SYSTEM

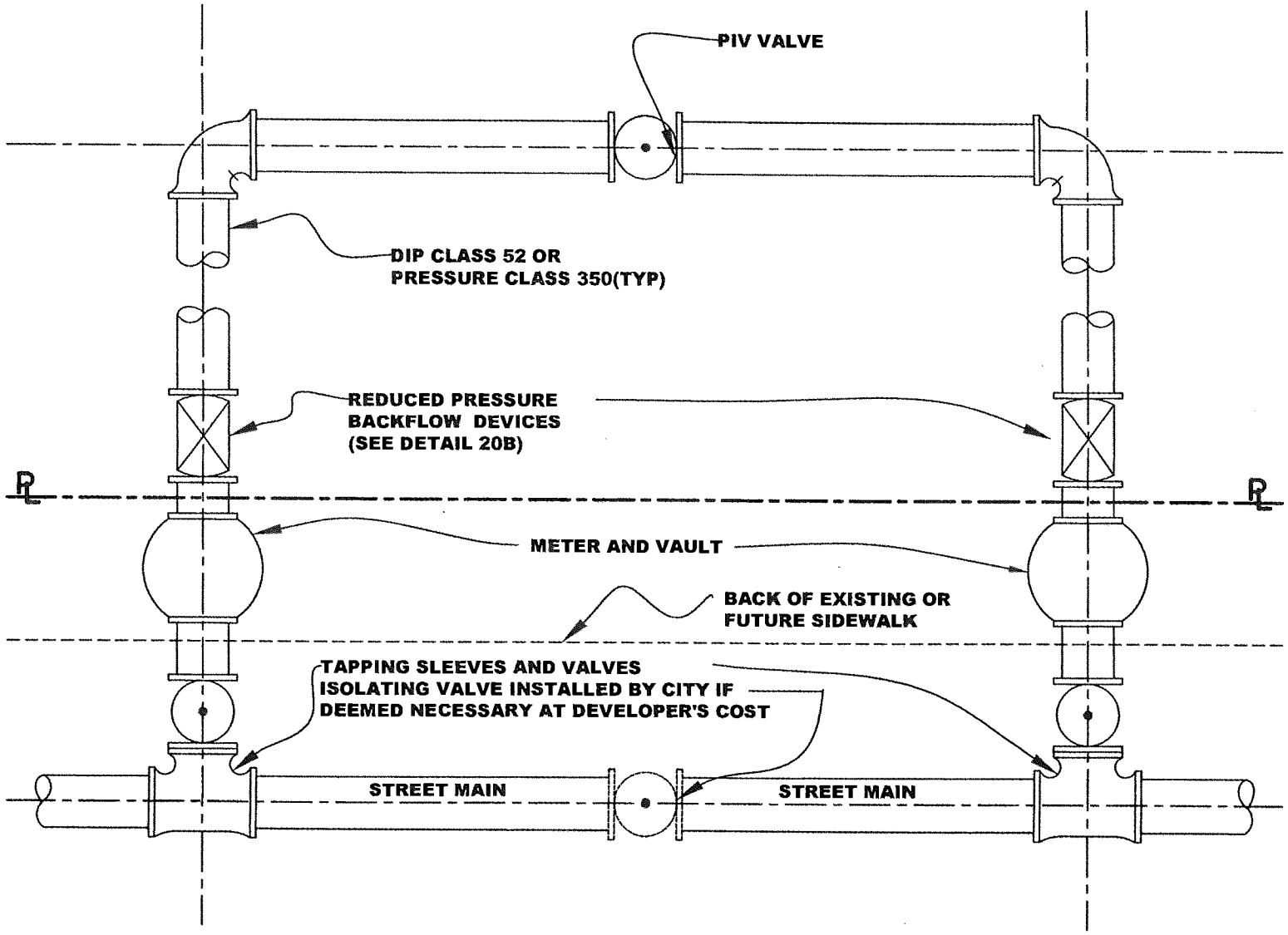

NOTES:

1. BACKFLOW DEVICE MUST BE SAME SIZE AS PIPE IN LOOPED SYSTEM.
2. MFM/MVR METER SHALL BE SAME SIZE AS LOOPED SYSTEM OR AS OTHERWISE APPROVED BY CITY ENGINEER.

DATE: JUNE 2006
REVISED: JUNE 2016

APPROVED BY:

10B

WATER SERVICE INSTALLATION
3" THROUGH 10" METERS

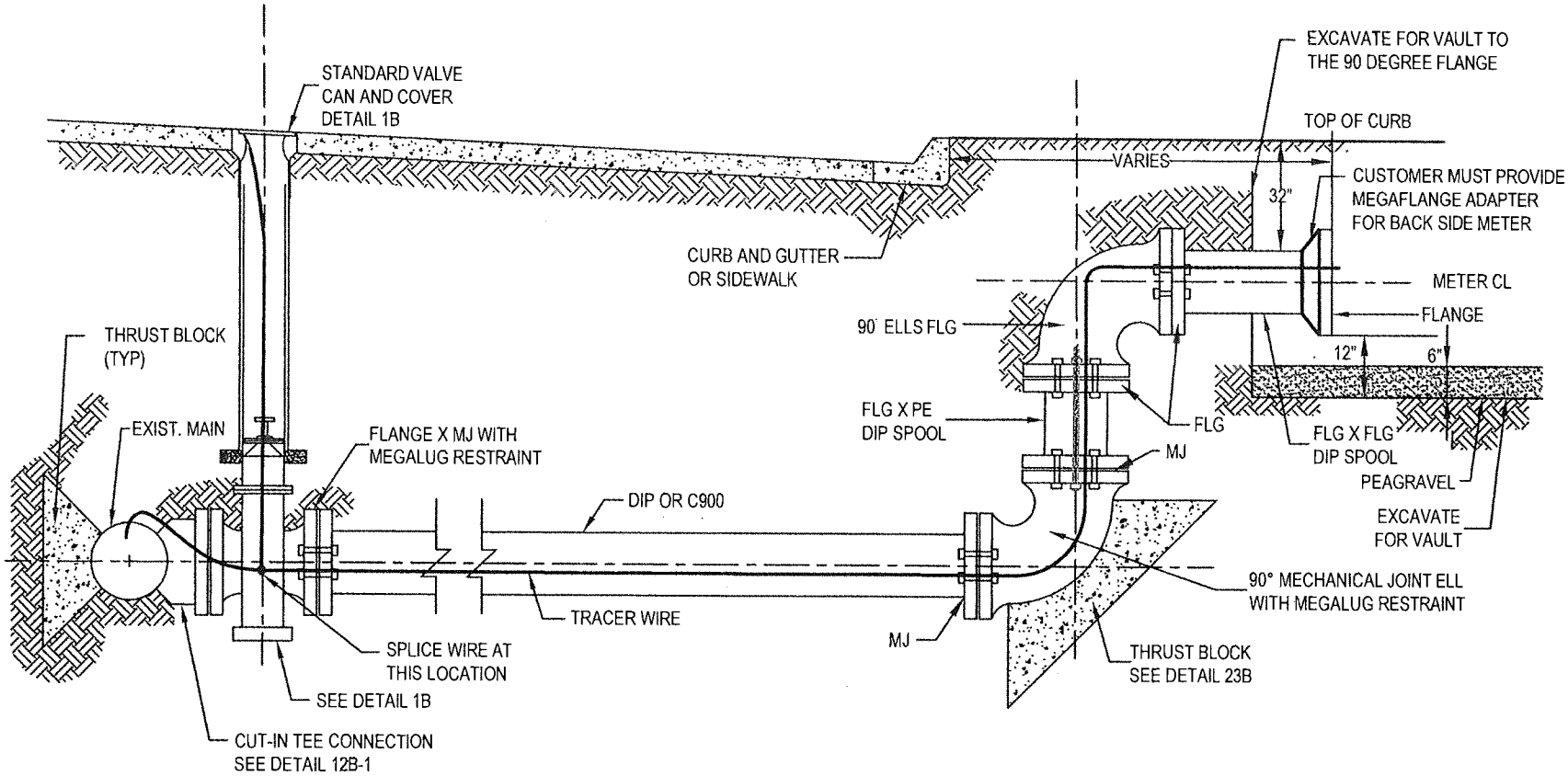

NOTES:

1. VAULTS WILL BE SET IN PUBLIC RIGHT - OF - WAY.
2. WHERE MOUND LANDSCAPING IS USED, A RETAINING WALL SHALL BE CONSTRUCTED IN ORDER TO KEEP VAULT LEVEL WITH TOP OF CURB.
3.A AN EXCAVATED HOLE, COMPLETE WITH PEAGRAVEL BASE AND IN ACCORDANCE WITH THESE DETAILS, SHALL BE PROVIDED PRIOR TO CITY INSTALLATION OF VAULT, METER AND APPURTENANCES.
3.B AN EXCAVATED HOLE COMPLETE WITH 4" CONCRETE SLAB AND 4" OF ABOVE PEAGRAVEL BASE TO BE USED IN ALL SIDEWALK INSTALLATIONS SHALL BE PROVIDED PRIOR TO CITY INSTALLATION.
4. TRACER WIRE SHALL BE INSTALLED FROM MAIN AND EXTEND INTO VALVE BOX AND METER BOX PER CITY STD. DETAILS.
5. NON METALLIC WARNING TAPE BLUE COLOR LETTERS WATER MAIN BURIED BELOW.
6. FINISHED GRADE TO TOP OF PIPE BEHIND CURB IS 32".
7. ALL MJ FITTINGS SHALL HAVE MEGA LUG RESTRAINT. ALL FITTINGS MUST BE EPOXY COATED.
8. BUILDING SIDE OF METER PIPE TO BE LABELED WITH CORRESPONDING BUILDING ADDRESS.
9. DIP MUST BE WRAPPED AND TAPED.

ABBREVIATIONS:

FLG	FLANGE
MJ	MECHANICAL JOINT
PE	PLAIN END

APPROVED BY:

DATE : JUNE 2006
REVISED : APRIL 2016

12B

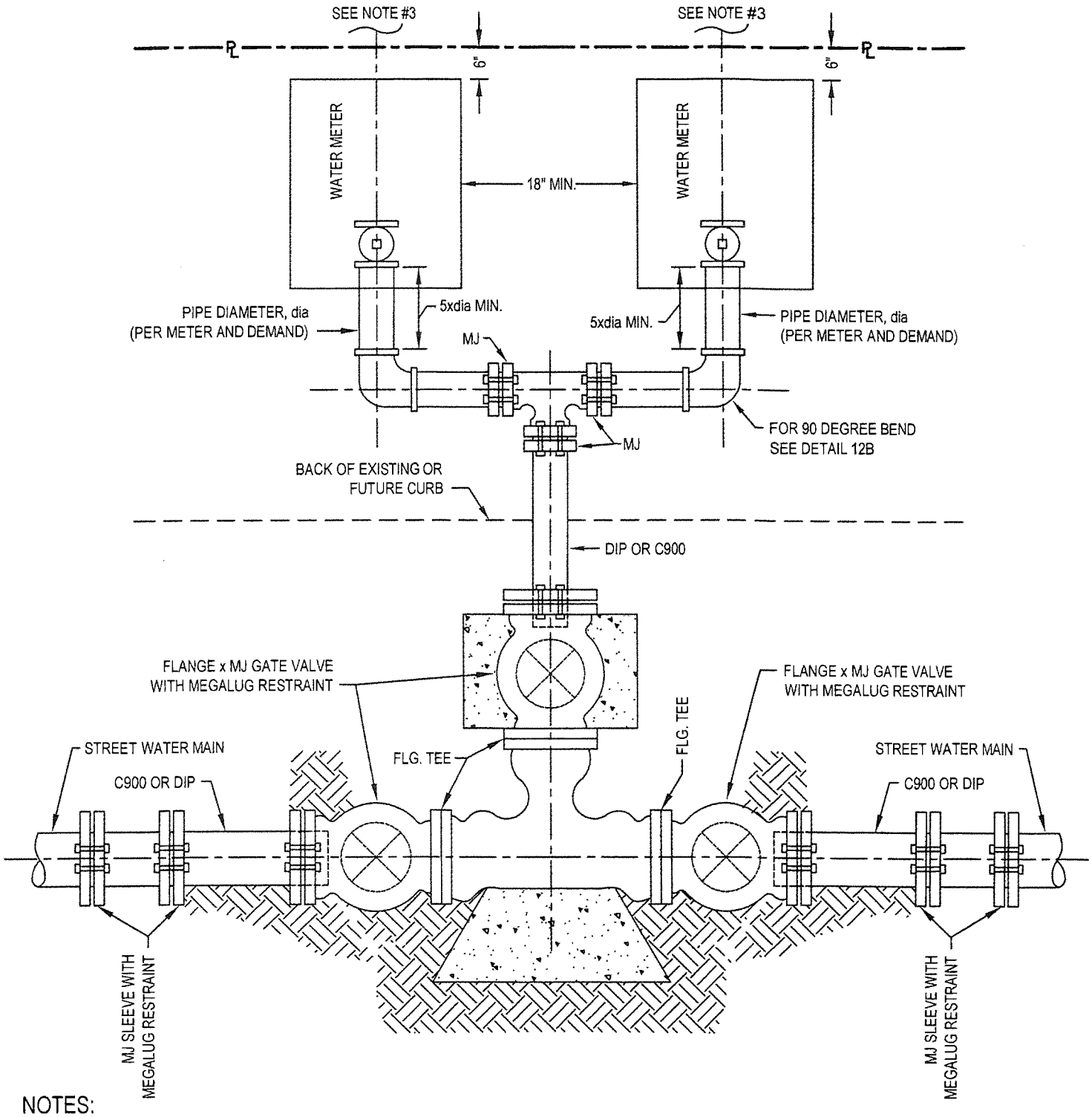

NOTES:

1. DUAL METERS USED FOR INDIVIDUAL BUILDINGS AS REQUIRED BY CITY.
2. A 18-INCH MINIMUM CLEARANCE BETWEEN METER BOXES IS REQUIRED, ALL BOXES ARE REQUIRED TO BE CENTERED OVER METERS.
3. A REDUCED PRESSURE PRINCIPLE TYPE BACK FLOW PREVENTION DEVICE IS REQUIRED FOR EACH METER. SEE STANDARD DETAIL 20B OR 20B-1. LABEL BUILDING SIDE PIPE INTO METER BOX WITH CORRESPONDING BUILDING ADDRESS.
4. TRACER WIRE SHALL BE INSTALLED FROM MAIN AND EXTEND INTO VALVE BOX AND METER BOX.
5. SEE STANDARD DETAIL 1B FOR WATER VALVE BOXES.
6. VALVES TO BE USED ARE MUELLER A 2360-23 EPOXY COATED.
7. DIP WRAPPED AND TAPED.

ABBREVIATIONS:

DIP	DUCTILE IRON PIPE
FLG	FLANGE
MIN.	MINIMUM
MJ	MECHANICAL JOINT
PL	PROPERTY LINE

DUAL METERS
FOR 3" OR LARGER METERS

APPROVED BY:

DATE : DECEMBER 2015
REVISED : APRIL 2016

12B-1

TWO METER MANIFOLD SERVICE
(1" SERVICE LINE FOR TWO 5/8" METERS)

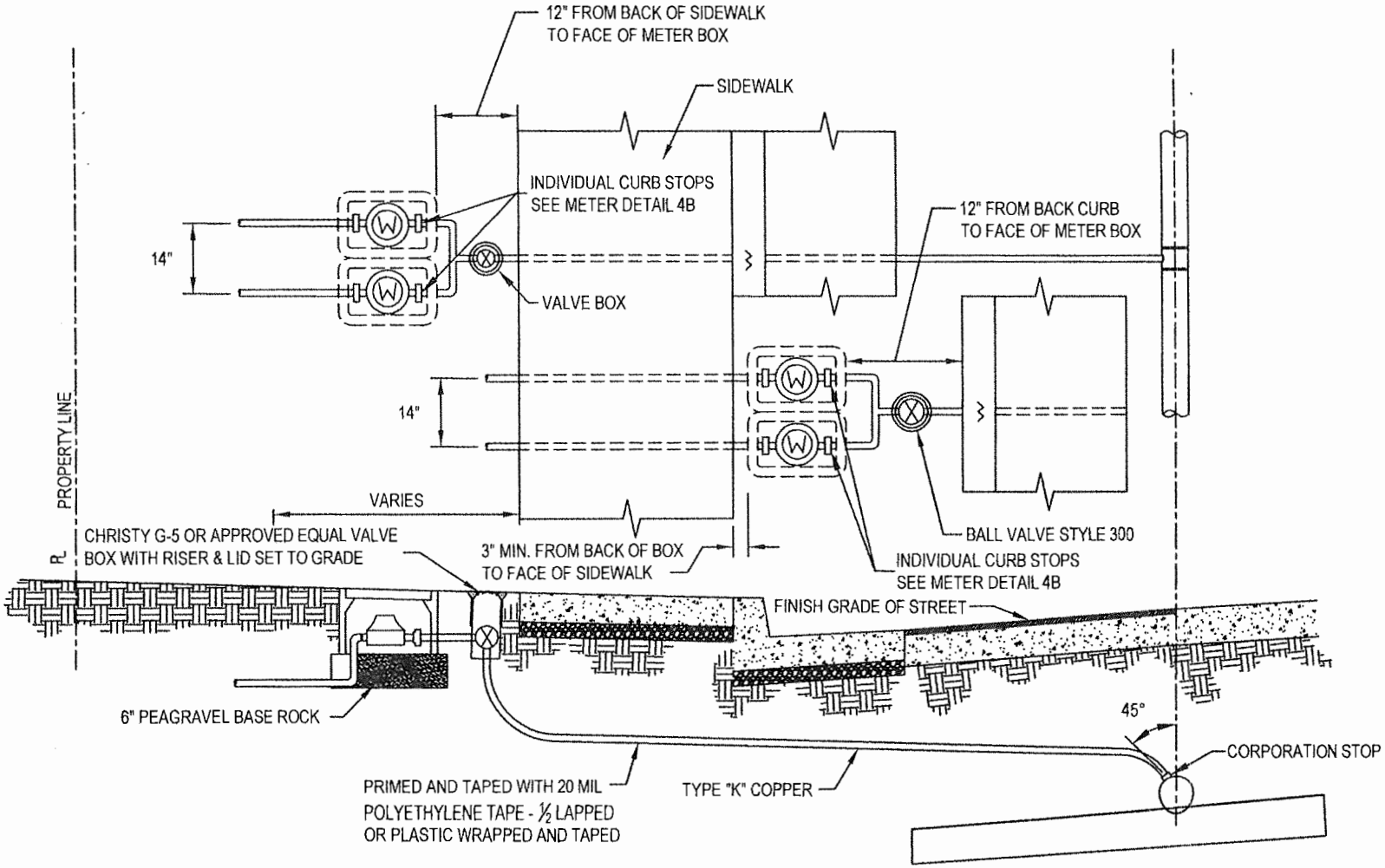

NOTES:

1. MANIFOLD SERVICE CAN BE USED IN LIEU OF INDIVIDUAL SERVICE LATERALS FROM THE STREET MAIN.
2. MATERIAL - MANIFOLD, NIPPLES, AND FITTINGS SHALL BE COPPER OR BRASS. COPPER PIPE CONNECTION TO BE COMPRESSION TYPE.
3. FOR FURTHER DETAILS, SEE STANDARD DETAIL 4B.
4. WHEN THE CURB IS A ROLLED CURB, INSTALL TRAFFIC RATED METER BOX AND LID.
5. LABEL BUILDING SIDE PIPE INTO METER BOX WITH CORRESPONDING BUILDING ADDRESS.

DATE : JUNE 2006
REVISED: APRIL 2016

APPROVED BY:

DWG: 13B

MANIFOLD SERVICE FOR 3 OR MORE METERS UP TO 1" METER

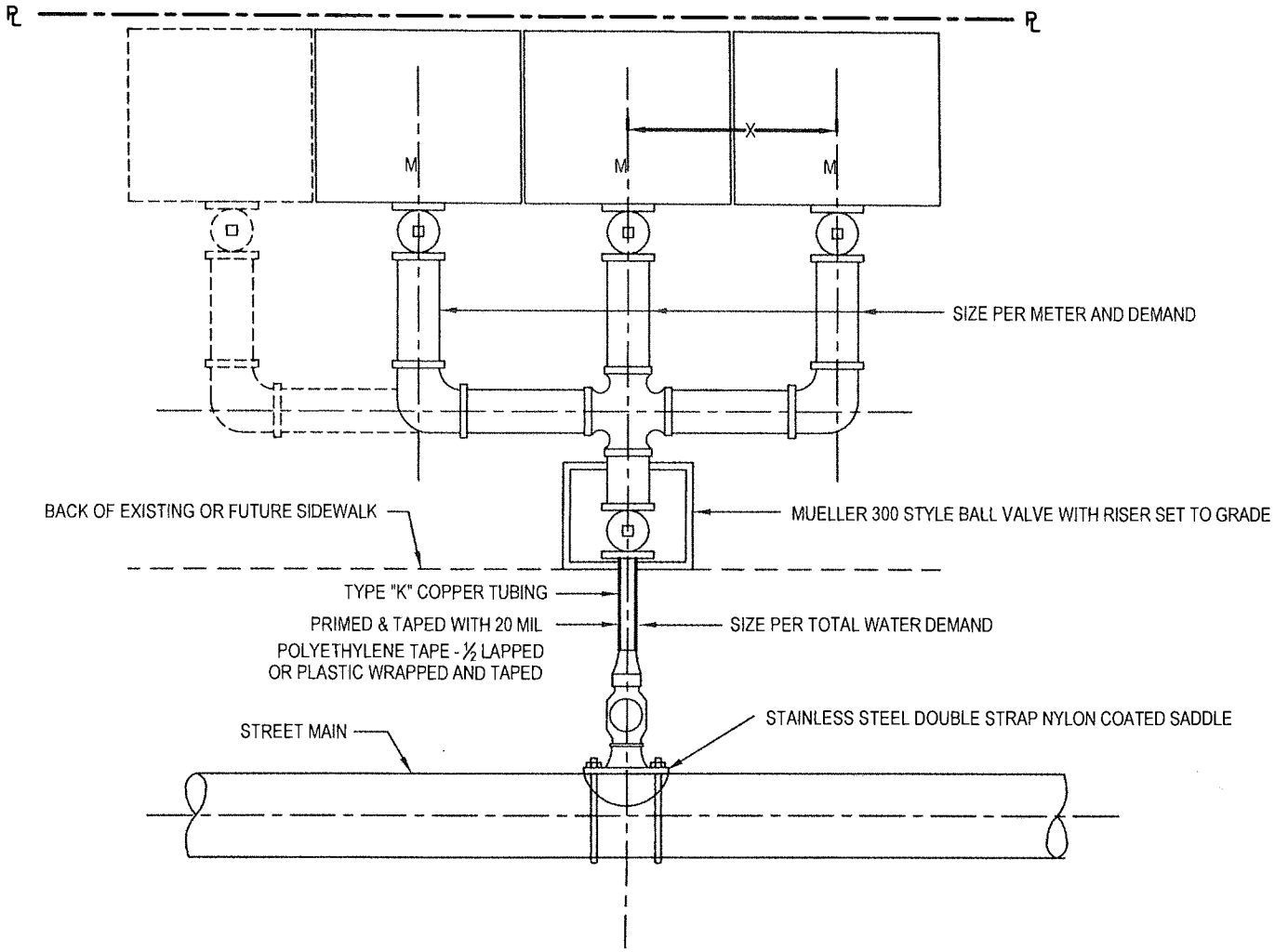

NOTES:

1. MANIFOLD SERVICE CAN BE USED IN LIEU OF A NUMBER OF INDUVIDUAL SERVICE LATERALS FROM THE STREET MAIN.
2. EACH METER CONNECTION MUST HAVE A CURB STOP BEFORE EACH METER.
3. FOR FURTHER DETAILS, SEE STANDARD DETAIL 4B.
4. A 3-INCH MINIMUM CLEARANCE BETWEEN METER BOXES IS REQUIRED, ALL BOXES ARE REQUIRED TO BE CENTERED OVER METERS.
5. LABEL BUILDING ADDRESS SIDE PIPE INTO METER BOX WITH CORRESPONDING BUILDING ADDRESS.

DATE : JUNE 2006
REVISED : APRIL 2016

APPROVED BY:

14B

MANIFOLD SERVICE 3 OR MORE METERS
(ALTERNATIVE PIPE ARRANGEMENT)

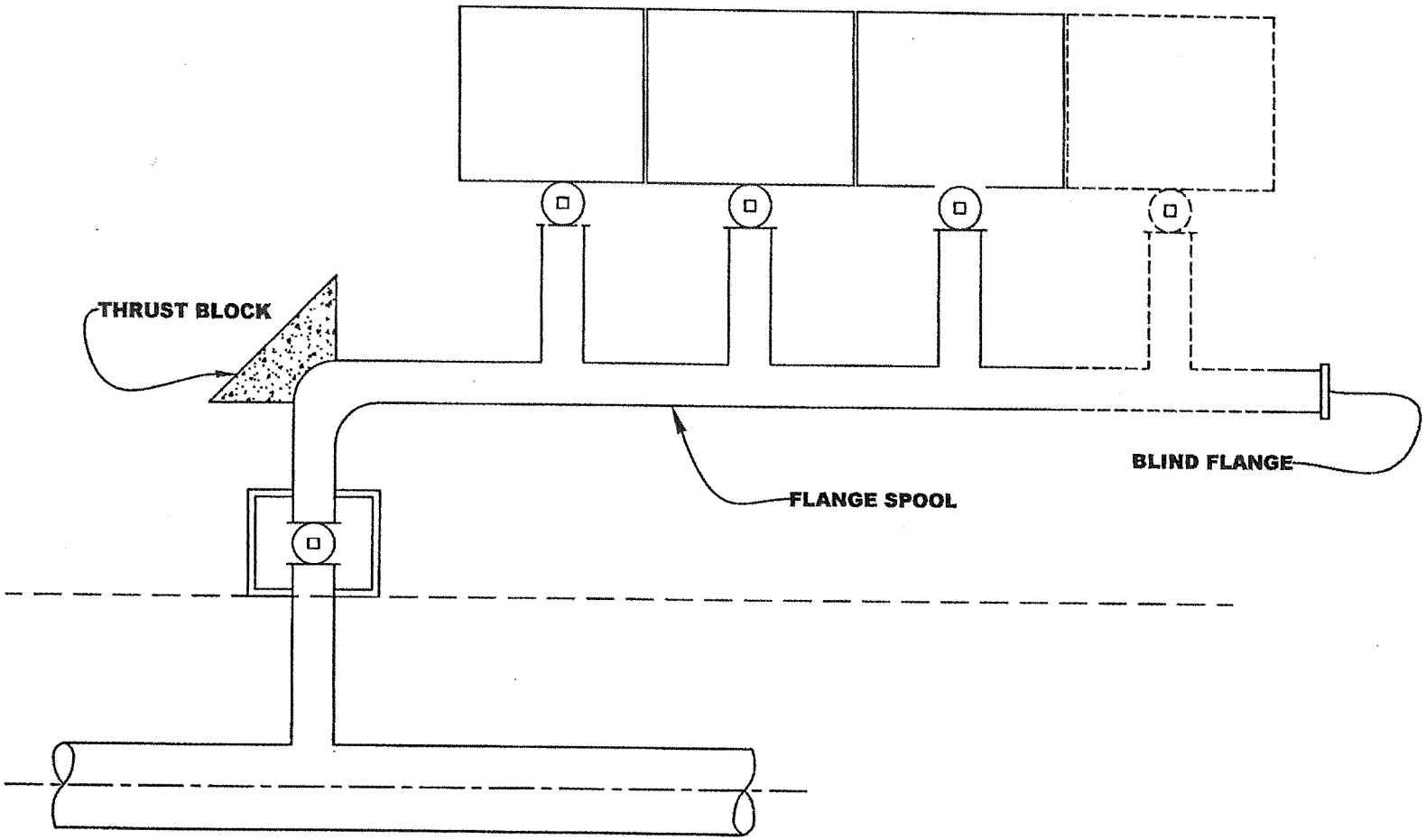

NOTES:

1. THIS IS AN ALTERNATIVE PIPE ARRANGEMENT TO THAT SHOWN ON STANDARD DETAIL 14B.
2. FOR FURTHER DETAILS, REFER TO STANDARD DETAIL 14B.

DATE: JUNE 30, 2006

APPROVED BY:

14B-1

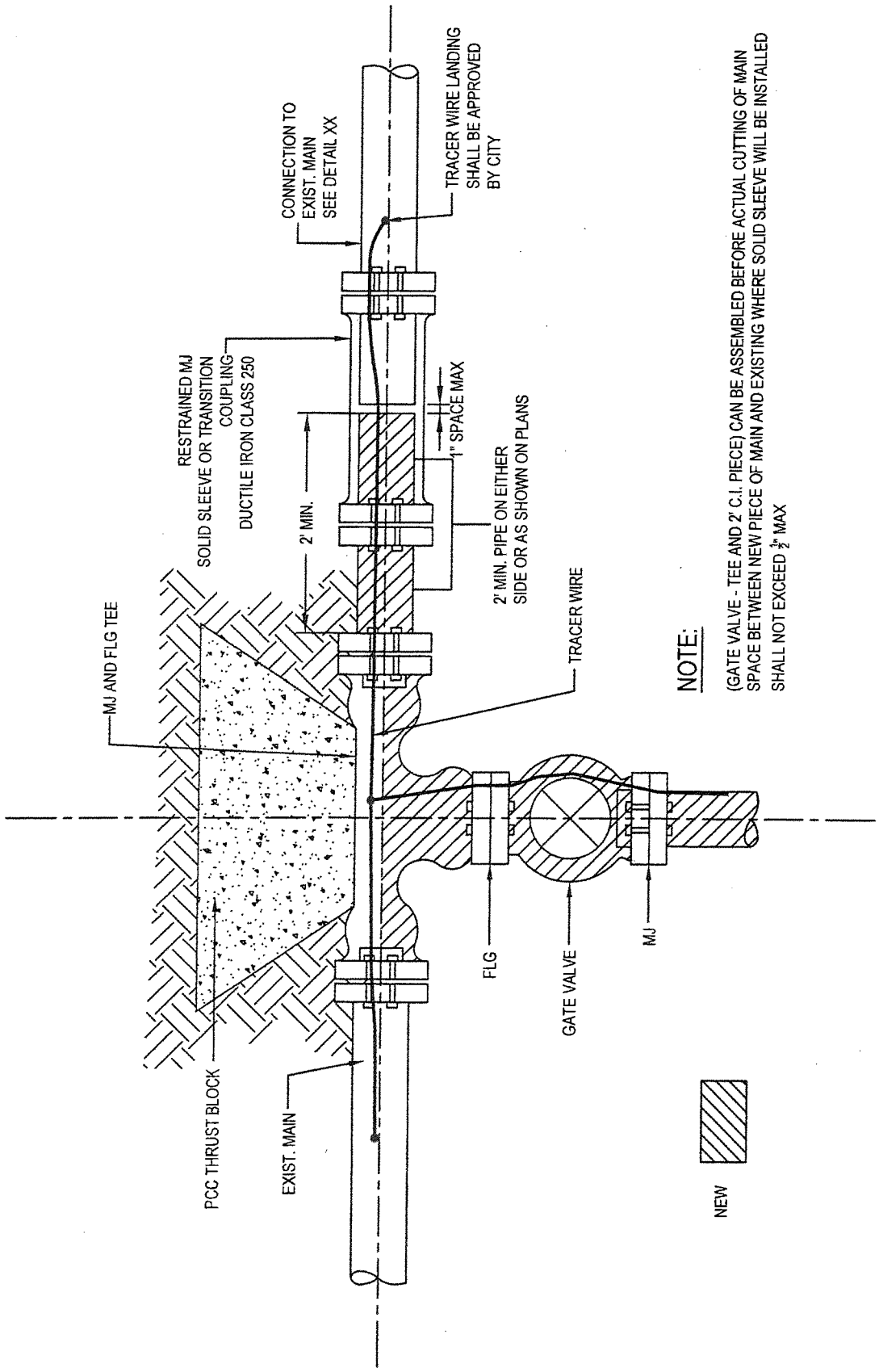

NOTE:

(GATE VALVE - TEE AND 2' C.I. PIECE) CAN BE ASSEMBLED BEFORE ACTUAL CUTTING OF MAIN SPACE BETWEEN NEW PIECE OF MAIN AND EXISTING WHERE SOLID SLEEVE WILL BE INSTALLED SHALL NOT EXCEED $\frac{1}{2}$" MAX

ABBREVIATIONS:

FLG	FLANGE
MJ	MECHANICAL JOINT
PE	PLAIN END

INSTALLATION OF CUT - IN TEE AND GATE VALVE

APPROVED BY:

DATE : JUNE 30, 2006
REVISED: SEPTEMBER 2014

15B

THRUST BLOCK FOR HORIZONTAL BENDS

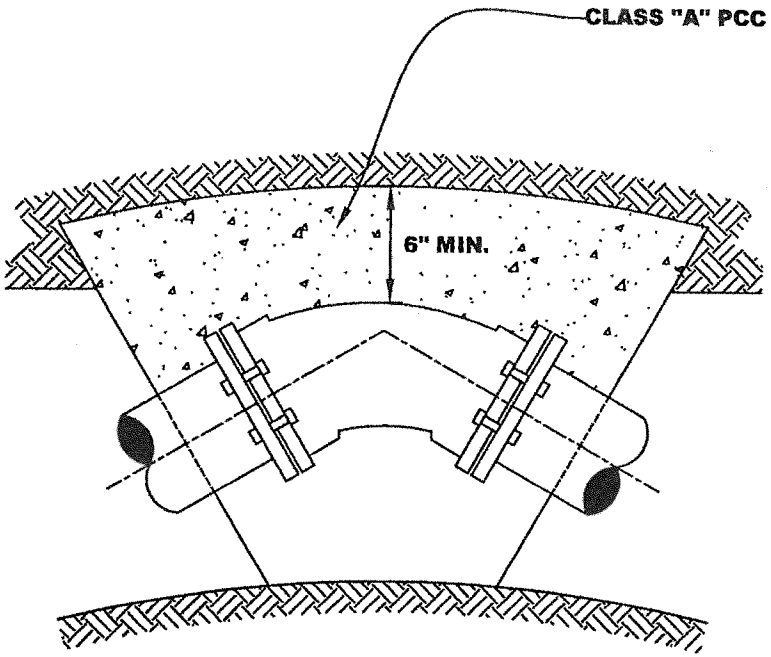

PLAN

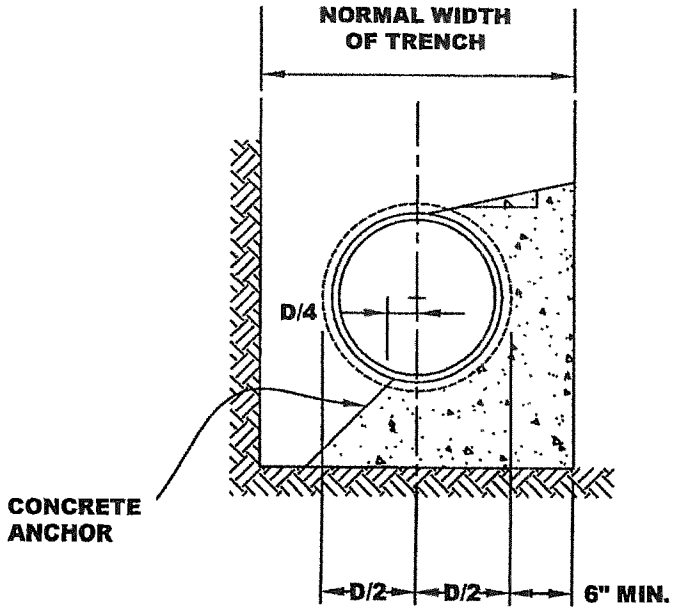

SECTION

NOTES:

1. D = PIPE DIAMETER
2. WRAP FLANGES/BOLTS IN VISQUEEN

DATE: JUNE 30, 2006

APPROVED BY

DWG. 16B

2006 STANDARD DETAILS

WATER LINE VERTICAL OFFSET

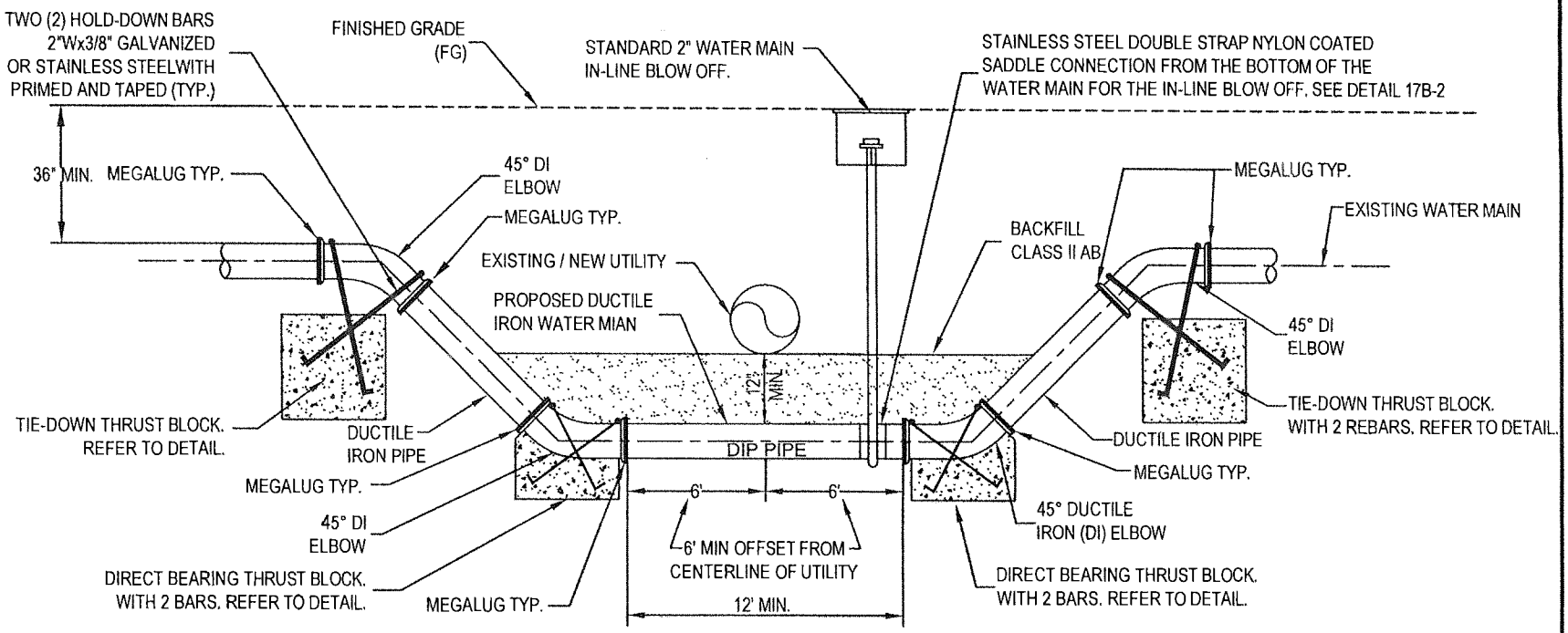

WATER LINE VERTICAL OFFSET DETAIL

NOT TO SCALE

NOTES:

1. ALL FITTINGS TO BE MJ x MJ WITH MEGALUG RESTRAINTS. THRUST BLOCK DIMENSIONS PER DETAILS BELOW & STD. DETAIL 23B.
1. CONTRACTOR TO CONFIRM SIZE, MATERIAL, LINE AND LEVEL OF WATER MAIN AND OTHER IMPACTED EXISTING UTILITIES PRIOR TO CONSTRUCTION.
2. ALL DUCTILE IRON PIPE & FITTINGS SHALL BE POLYETHYLENE WRAPPED IN TAPE PRIOR TO INSTALLATION PER AWWA C105.
3. HOLD-DOWN BARS MUST BE PRIMED AND TAPED WITH A 90 DEGREE HOOK.

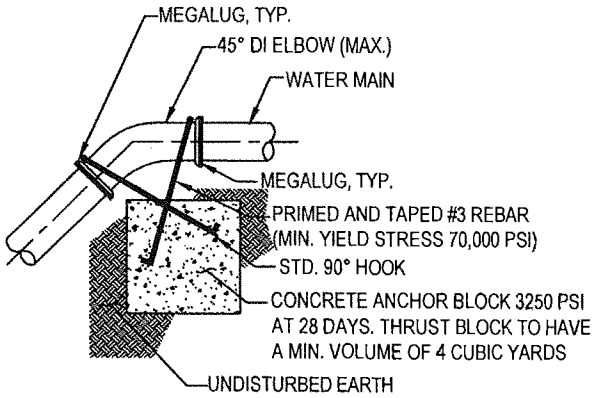

TIE-DOWN THRUST BLOCK RESTRAINT DETAIL

NOT TO SCALE

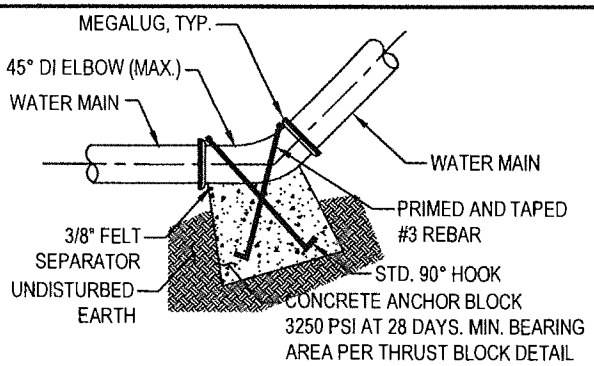

DIRECT BEARING THRUST BLOCK DETAIL

NOT TO SCALE

NOTES: (TO BE PROVIDED BY CITY)

1. PIPE LARGER THAN 12" SHALL BE DESIGNED BY ENGINEER.
2. THRUST BLOCK SHALL NOT INTERFERE WITH MEGALUGS OR OTHER FITTINGS.
3. REFER TO TABLE IN DETAIL 23B FOR THRUST BLOCK VOLUME.
4. ALL THRUST BLOCKS SHALL BE FORMED. THE MINIMUM THICKNESS SHALL BE ⅜" PLYWOOD OR APPROVED BY CITY.

DATE : JUNE 30, 2006
REVISED: MAY 2015

DWG. 17B

APPROVED BY:

WATER LINE VERTICAL OFFSET

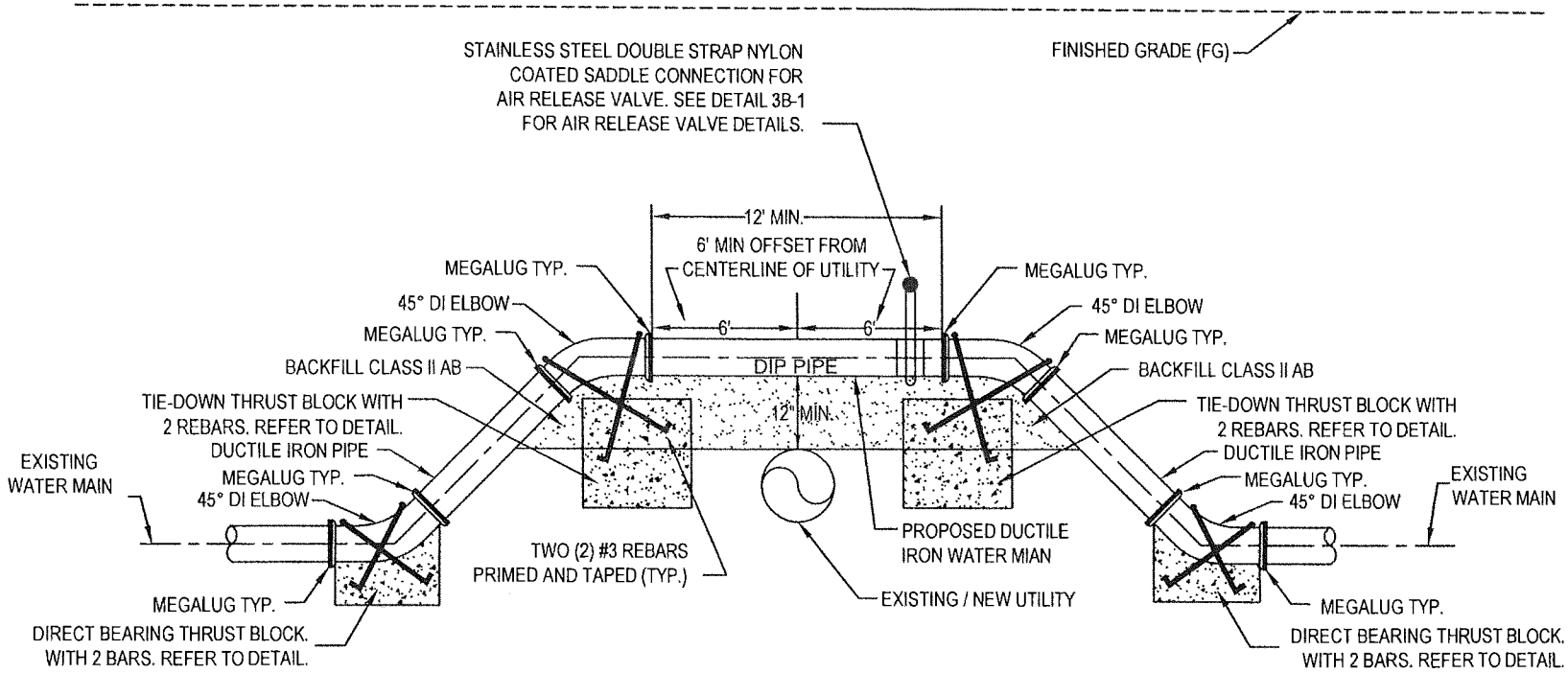

WATER LINE VERTICAL OFFSET DETAIL

NOT TO SCALE

NOTES:

1. ALL FITTINGS TO BE MJ x MJ WITH MEGALUG RESTRAINTS. THRUST BLOCK DIMENSIONS PER DETAILS BELOW & STD. DETAIL 23B.
2. CONTRACTOR TO CONFIRM SIZE, MATERIAL, LINE AND LEVEL OF WATER MAIN AND OTHER IMPACTED EXISTING UTILITIES PRIOR TO CONSTRUCTION.
3. ALL DUCTILE IRON PIPE & FITTINGS SHALL BE POLYETHYLENE WRAPPED IN TAPE PRIOR TO INSTALLATION PER AWWA C105.
4. HOLD-DOWN BARS MUST BE PRIMED AND TAPED WITH A 90 DEGREE HOOK.

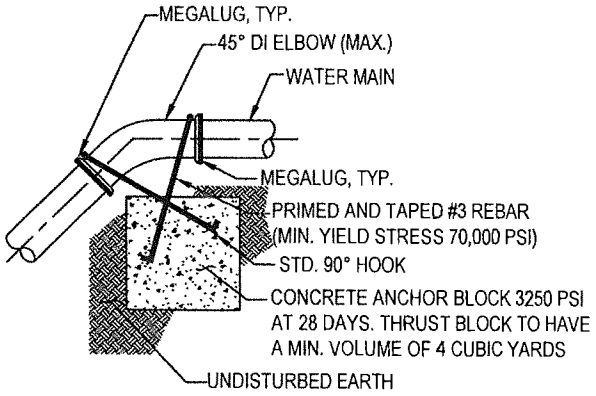

TIE-DOWN THRUST BLOCK RESTRAINT DETAIL

NOT TO SCALE

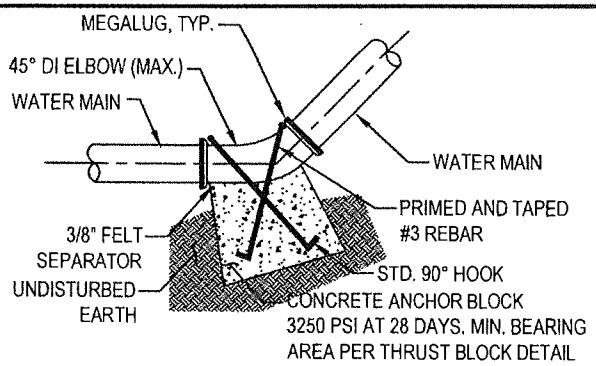

DIRECT BEARING THRUST BLOCK DETAIL

NOT TO SCALE

NOTES: (TO BE PROVIDED BY CITY)

1. PIPE LARGER THAN 12" SHALL BE DESIGNED BY ENGINEER.
2. THRUST BLOCK SHALL NOT INTERFERE WITH MEGALUGS OR OTHER FITTINGS.
3. REFER TO TABLE IN DETAIL 23B FOR THRUST BLOCK VOLUME.
4. ALL THRUST BLOCKS SHALL BE FORMED. THE MINIMUM THICKNESS SHALL BE 3/8" PLYWOOD OR APPROVED BY CITY.

WATER LINE VERTICAL OFFSET

DATE : JUNE 30, 2006
REVISED: MAY 2015

APPROVED BY:

DWG. 17B-1

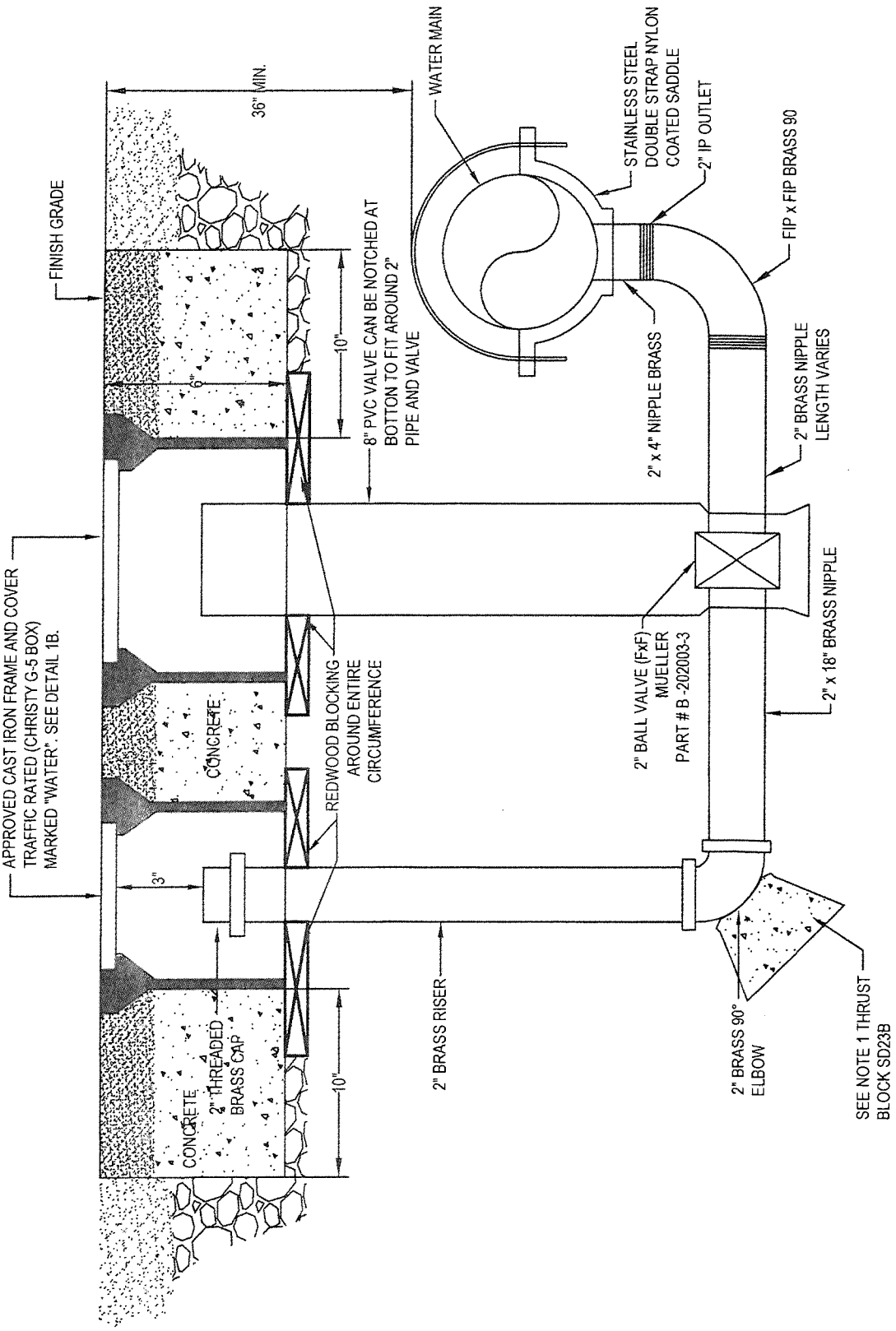

STANDARD BLOW OFF

APPROVED BY:

DATE : JUNE 30, 2006

REVISED: MAY 2015

DWG. 17B-2

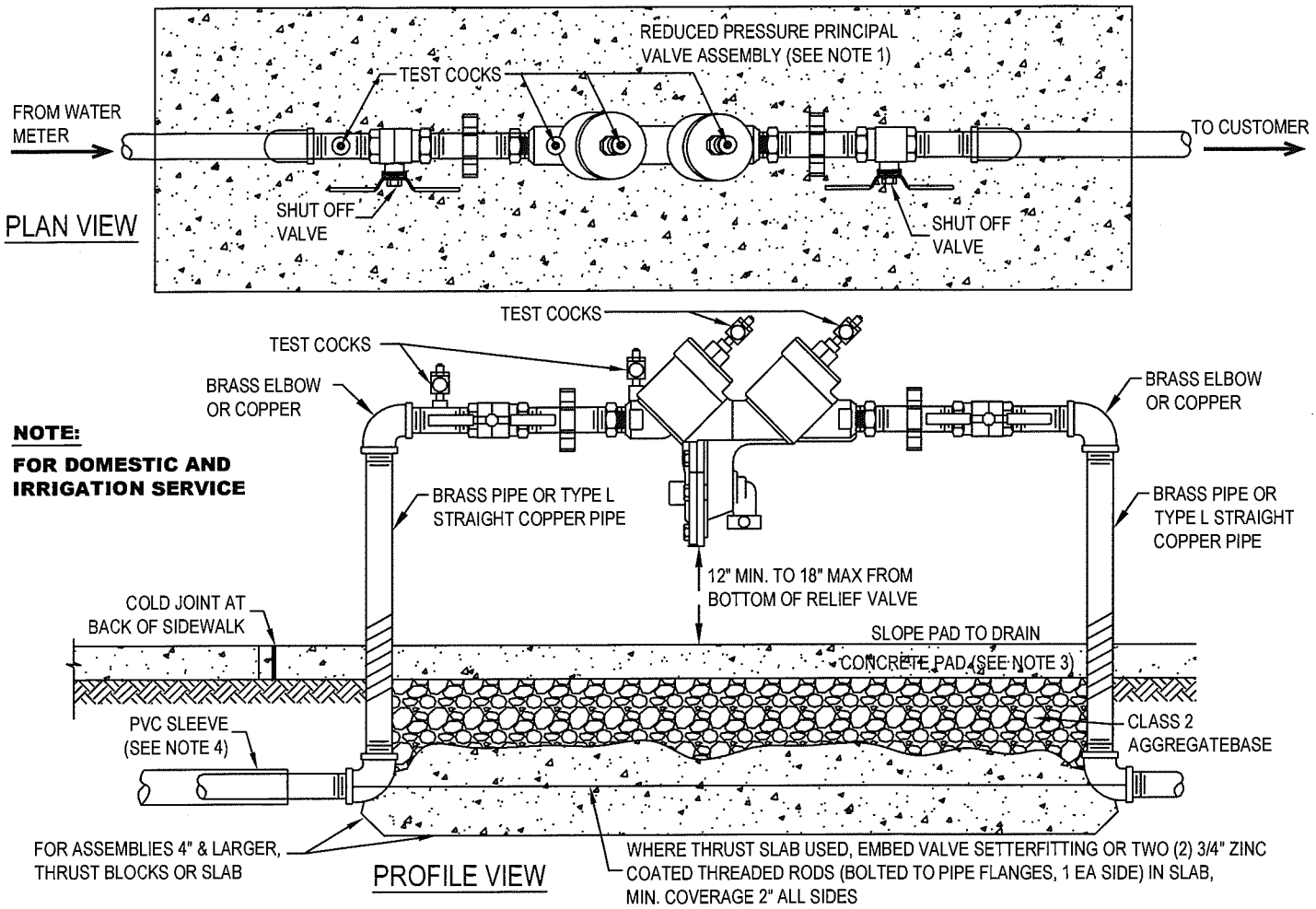

NOTES:

1. ALLOWED BACKFLOW ASSEMBLIES AND THEIR ORIENTATIONS SHALL BE LIMITED TO THOSE SPECIFIED ON THE "LIST OF APPROVED BACKFLOW PREVENTION ASSEMBLIES" BY THE UNIVERSITY OF SOUTHERN CALIFORNIA'S FOUNDATION FOR CROSS-CONNECTION CONTROL AND HYDRAULIC RESEARCH, 2010 OR LATEST REVISION.
2. THE BACKFLOW DEVICE SHALL BE LOCATED: ON PRIVATE PROPERTY AND A MAXIMUM OF 5' FROM BACK OF SIDEWALK(TYP); OR AT A LOCATION DETERMINED BY THE WATER DISTRIBUTION CROSS CONNECTION PERSONNEL IN THE FIELD.
3. CONCRETE PAD SHALL BE CLASS B CONCRETE, 4" MINIMUM THICKNESS, REINFORCED WITH WELDED WIRE MESH.
4. WHERE SERVICE LINES SMALLER THAN 4" PASS UNDER A SIDEWALK, THEY SHALL BE INSTALLED IN A PVC CASING/SLEEVE AT LEAST 1" LARGER THAN THE SERVICE LINE AND EXTENDS AT LEAST 6" BEYOND THE EDGES OF THE SIDEWALK.
5. METAL PIPES EXPOSED TO SOIL OR CONCRETE SHALL BE COATED WITH 3M SCOTCHWRAP PIPE PRIMER AND WRAPPED WITH 3M SCOTCHWRAP 20ML NO.51 BLACK PVC TAPE(1/2"OVERLAP).
6. THE PORTION OF THE TRENCH FROM BACK OF METER TO THE DEVICE SHALL REMAIN OPEN UNTIL WATER DISTRIBUTION CROSS CONNECTION PERSONNEL HAVE INSPECTED AND APPROVED THE INSTALLATION. CALL 669-600-7322.
7. THE TESTING SIDE OF THE DEVICE SHALL HAVE A MINIMUM 24" OF CLEARANCE FROM OBSTRUCTIONS(NON-TRIMMABLE LANDSCAPING, BUILDINGS, UTILITIES, ETC). MULTIPLE BACKFLOW DEVICES SHALL BE SEPARATED BY A MINIMUM OF 18" AND BE OF EQUAL HEIGHT.
8. BOLLARDS MAY BE REQUIRED BY CITY TO PROVIDE ADDITIONAL PROTECTION.
9. BACKFLOW ASSEMBLIES INSTALLED ON POTABLE WATER SERVICES SHALL BE LEAD FREE.
10. BACKFLOW ASSEMBLIES SHALL BE THE SAME SIZE OF THE WATER METER.
11. NO GALVANIZED PIPE OR DISSIMILAR METAL PIPE MAY BE INSTALLED.
12. A BACKFLOW PREVENTER ENCLOSURE IS OPTIONAL, IF INSTALLED FOLLOW DETAIL 19B.

BACKFLOW PREVENTION DEVICE SIZE UP TO 2"	Sunnyvale	APPROVED BY:
	DATE: JUNE 30, 2006 **REVISED: JULY 2019**	DWG. **18B**

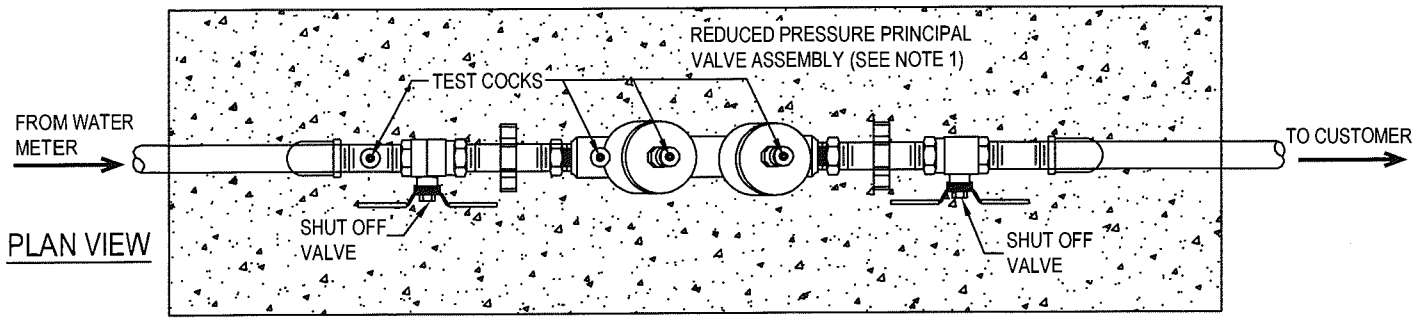

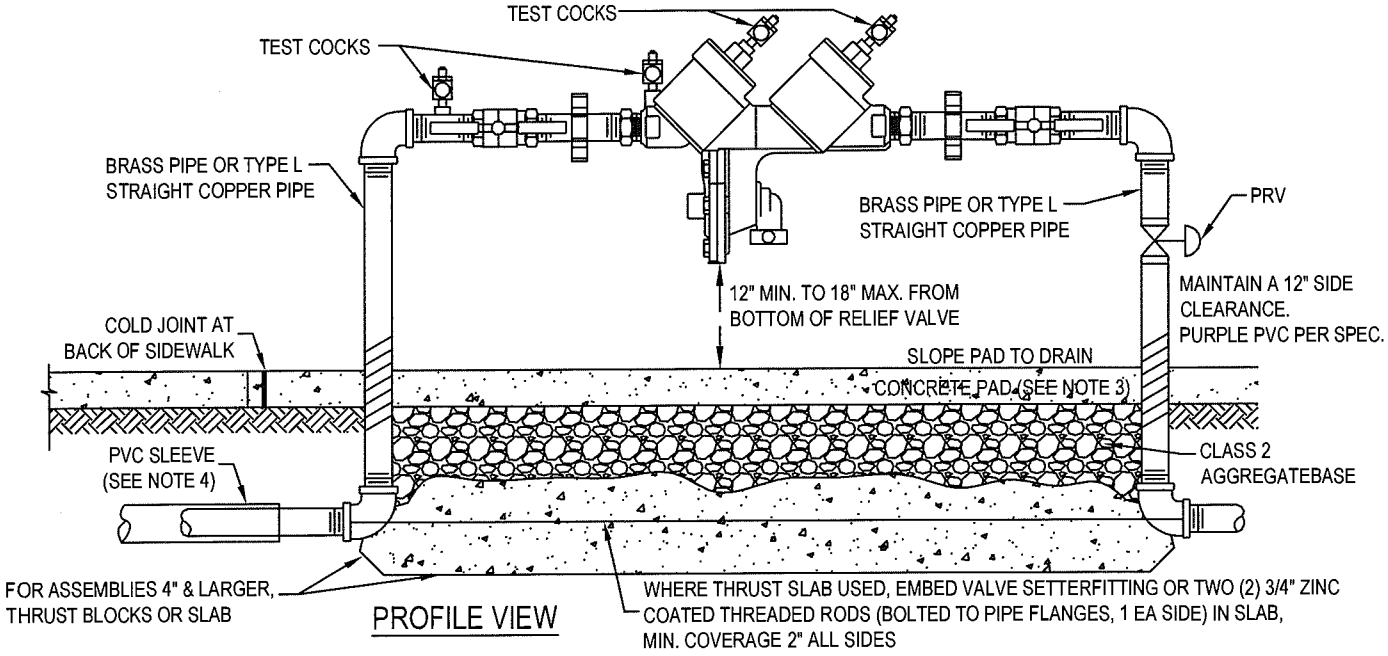

NOTES:

1. ALLOWED REDUCED PRESSURE PRINCIPLE BACKFLOW ASSEMBLIES AND THEIR ORIENTATIONS SHALL BE LIMITED TO THOSE SPECIFIED ON THE "LIST OF APPROVED BACKFLOW PREVENTION ASSEMBLIES" BY THE UNIVERSITY OF SOUTHERN CALIFORNIA'S FOUNDATION FOR CROSS-CONNECTION CONTROL AND HYDRAULIC RESEARCH, 2010 OR LATEST REVISION.
2. THE BACKFLOW DEVICE SHALL BE LOCATED: ON PRIVATE PROPERTY AND A MAXIMUM OF 5' FROM BACK OF SIDEWALK(TYP); OR AT A LOCATION DETERMINED BY THE WATER DISTRIBUTION CROSS CONNECTION PERSONNEL IN THE FIELD.
3. CONCRETE PAD SHALL BE CLASS B CONCRETE, 4" MINIMUM THICKNESS, REINFORCED WITH WELDED WIRE MESH.
4. WHERE SERVICE LINES SMALLER THAN 4" PASS UNDER A SIDEWALK, THEY SHALL BE INSTALLED IN A PVC CASING/SLEEVE AT LEAST 1" LARGER THAN THE SERVICE LINE AND EXTENDS AT LEAST 6" BEYOND THE EDGES OF THE SIDEWALK.
5. METAL PIPES EXPOSED TO SOIL OR CONCRETE SHALL BE COATED WITH 3M SCOTCHWRAP PIPE PRIMER AND WRAPPED WITH 3M SCOTCHWRAP 20 MIL NO.51 BLACK PVC TAPE(1/2"OVERLAP).
6. THE PORTION OF THE TRENCH FROM BACK OF METER TO THE DEVICE SHALL REMAIN OPEN UNTIL WATER DISTRIBUTION CROSS CONNECTION PERSONNEL HAVE INSPECTED AND APPROVED THE INSTALLATION. CALL 669-600-7322.
7. THE TESTING SIDE OF THE DEVICE SHALL HAVE A MINIMUM 24" OF CLEARANCE FROM OBSTRUCTIONS(NON-TRIMMABLE LANDSCAPING, BUILDINGS, UTILITIES, ETC). MULTIPLE BACKFLOW DEVICES SHALL BE SEPARATED BY A MINIMUM OF 18" AND BE OF EQUAL HEIGHT.
8. BOLLARDS MAY BE REQUIRED BY CITY TO PROVIDE ADDITIONAL PROTECTION.
9. PRV TO BE MAINTAINED BY PROPERTY OWNER.
10. NO GALVANIZED PIPE OR DISSIMILAR METAL PIPE MAY BE INSTALLED.
11. A BACKFLOW PREVENTER ENCLOUSRE IS OPTION, IF INSTALLED FOLLOW DETAIL 19B.
12. BACKFLOW PREVENTER TO BE PAINTED WITH PURPLE COLOR, NO BRASS TO BE PAINTED.

RECYCLED WATER BACKFLOW PREVENTION DEVICE SIZE UP TO 2 INCHES	Sunnyvale **DATE : JUNE 30, 2006** **REVISED: JULY 2019**	APPROVED BY: DWG. **18B-1**

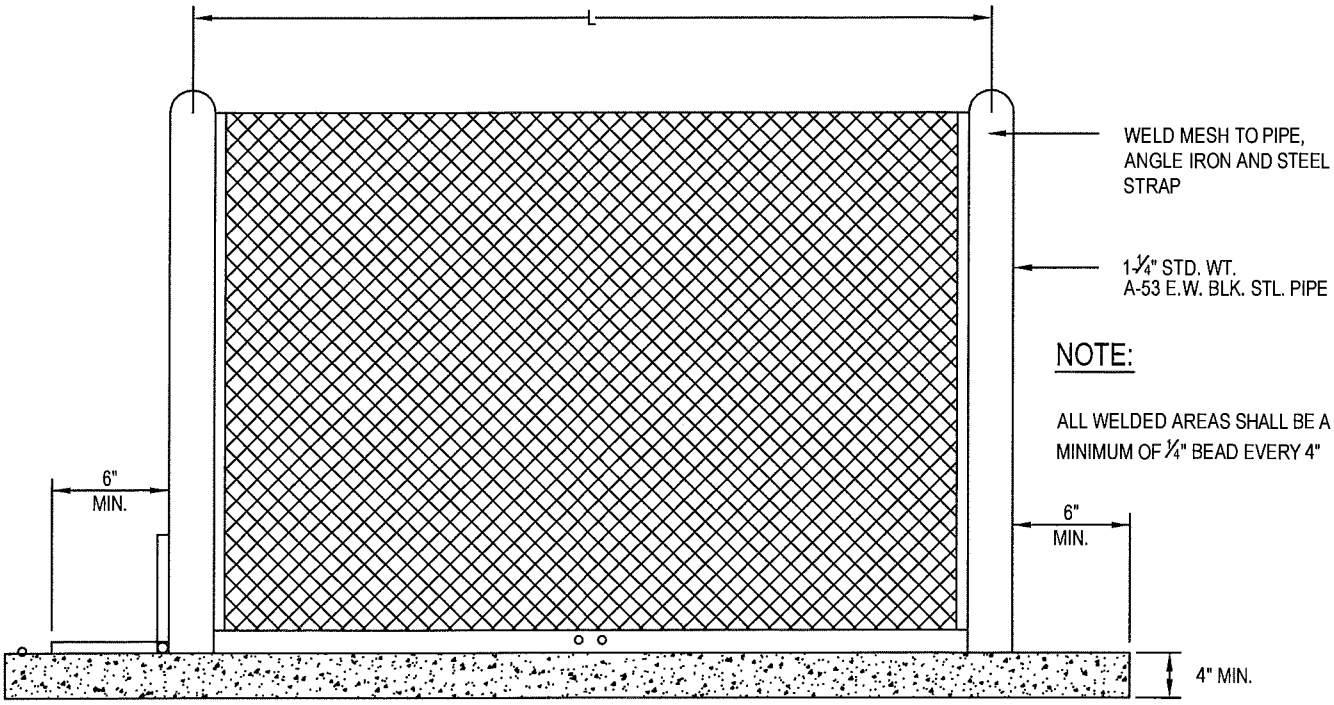

NOTE:

ALL WELDED AREAS SHALL BE A MINIMUM OF ¼" BEAD EVERY 4"

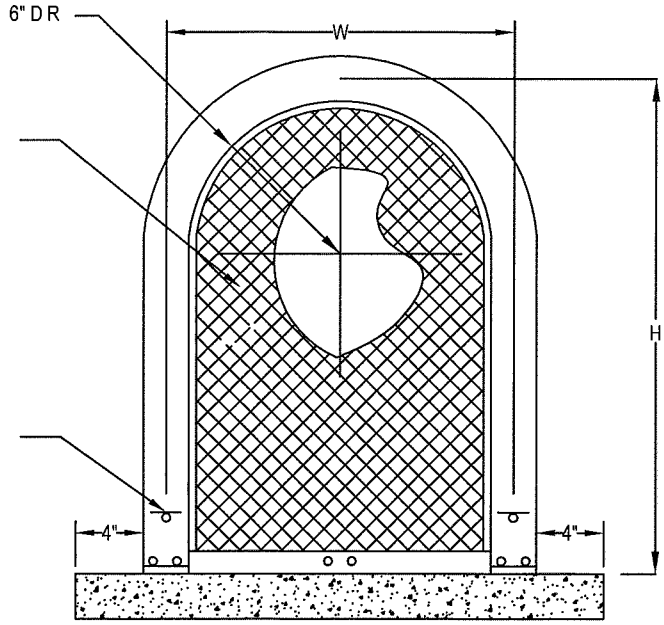

MODEL	CENTERLINE DIM.
GS - 1	12"W x 24"H x 24"L
GS - 2	12"W x 24"H x 32"L
GS - 3	12"W x 18"H x 42"L

NOTES:

1. ENCLOSURE IS RECOMMEND TO REDUCE RISK OF THEFT OR TAMPER ON ALL NEW CONSTRUCTION BACKFLOW DEVICES FOR SIZES ¾" TO 2".
2. "GUARDSHACK TM ENCLOSURE" MODEL GS OR APPROVED EQUAL, PHOENIX, ARIZONA 85032 (602-788-5411)
3. AFTER ALL WELDING, ELECTROSTATIC APPLICATION OF POWDER SHALL BE FUSION BONDED TO ENTIRE ENCLOSURE. (HUNTER GREEN)
4. ALL BOLTS SHALL BE ZINC PLATED.

BACKFLOW PREVENTION DEVICE ENCLOSURE

Sunnyvale

APPROVED BY:

DATE: JUNE 30, 2006
REVISED: JULY 2019

19B

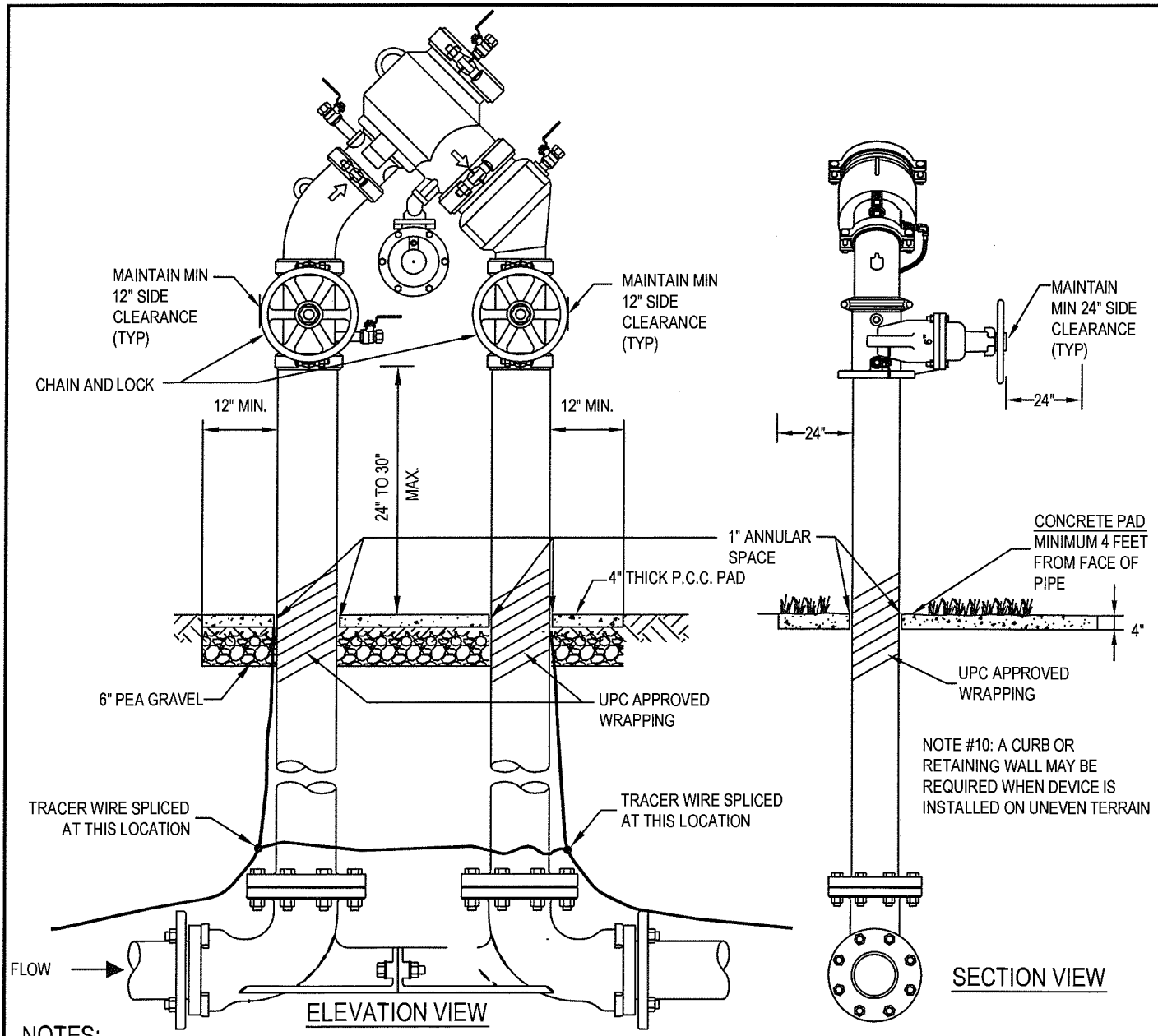

NOTES:

1. REDUCED PRESSURE PRINCIPLE TYPE BACKFLOW DEVICES SHALL BE WILKINS, FEBCO APPROVAL EQUAL PER USC LIST OF APPROVED BACKFLOWS.
2. REDUCED PRESSURE PRINCIPLE TYPE BACKFLOW DEVICES SHALL BE REQUIRED FOR THE PROTECTION OF THE PUBLIC WATER SUPPLY. (NO DOUBLE CHECK VALVE ASSEMBLIES, SEE AIR GAP)
3. BACKFLOW DEVICES SHALL BE INSTALLED ADJACENT TO AND ON PROPERTY SIDE OF SIDEWALK WHERE APPLICABLE. THE ASSEMBLY SHALL BE INSTALLED AS CLOSE AS POSSIBLE TO THE WATER METER AS APPROVED BY THE CITY'S CROSS CONNECTION PERSONNEL.
4. ALL DEVICES WILL HAVE RESILIENT SEATED SHUT - OFF VALVES. TEST COCKS WILL HAVE THREADED ENDS.
5. PRESS. DIFFERENTIAL VALVE OPENING TO BE 24" MINIMUM ABOVE GRADE
6. ALL PIPES AND SPOOLS SHALL BE DUCTILE IRON WITH NO EXCEPTIONS AND ALL JOINTS FLANGED.
7. ALL BOLTS/NUTS SHALL BE STAINLESS STEEL COMPONENTS WITH NO EXCEPTIONS.
8. DO NOT PAINT BRASS FITTINGS.
9. VALVE CONFIGURATION DECIDED ON JOB SITE.
10. ON SLOPING SURFACES, CONTRACTOR SHALL INSTALL A CONCRETE CURB/ WALL OR EQUIVALENT AROUND THE BACKFLOW.
11. THE PORTION OF THE TRENCH FROM BACK OF METER SHALL REMAIN OPEN UNTIL WATER DISTRIBUTION PERSONNEL HAVE INSPECTED AND APPROVED THE INSTALLATION, CALL 669-600-7322.
12. THE VALVE HANDWHEELS SHALL BE DOUBLE-LOCKED USING GALVANIZED STRAIGHT LINK CHAIN THAT LOCKS THE VALVE HANDWHEELS IN THE OPEN POSITION AND EITHER LOCK WILL RELEASE THE CHAIN.
13. BACKFLOW DEVICES SHALL BE LEAD FREE.
14. BACKFLOW ASSEMBLIES SHALL BE THE SAME SIZE AS THE METER.

VERTICAL ORIENTATION DOMESTIC RP ASSEMBLY BACKFLOW PREVENTION DEVICE SIZE 3" AND LARGER	Sunnyvale APPROVED BY:	
	DATE: JUNE 30, 2006 **REVISED: JULY 2019**	DWG. **20B**

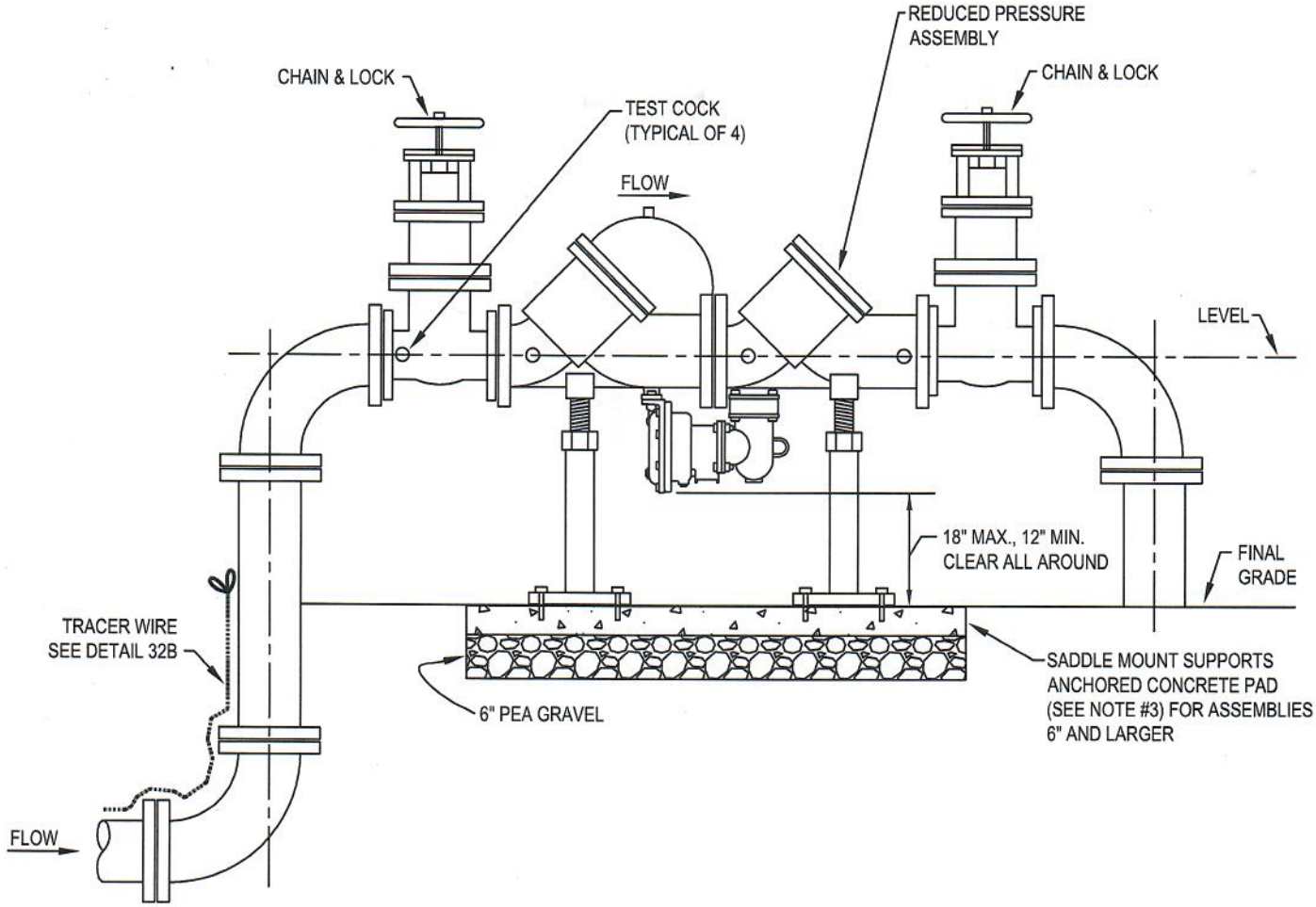

NOTES:

1. ALLOWED BACKFLOW ASSEMBLIES AND THEIR ORIENTATIONS SHALL BE LIMITED TO THOSE SPECIFIED ON THE "LIST OF APPROVED BACKFLOW PREVENTION ASSEMBLIES" BY THE UNIVERSITY OF SOUTHERN CALIFORNIA'S FOUNDATION FOR CROSS-CONNECTION CONTROL AND HYDRAULIC RESEARCH, LATEST VERSION.
2. THE BACKFLOW DEVICE SHALL BE LOCATED ON PRIVATE PROPERTY: AS CLOSE AS PRACTICAL TO THE USER'S CONNECTION AND SHALL BE INSTALLED A MINIMUM OF TWELVE INCHES (12") ABOVE GRADE AND NOT MORE THAN EIGHTEEN INCHES (18") ABOVE GRADE MEASURED TO THE BOTTOM OF THE DEVICE AND WITH A MINIMUM OF TWELVE INCHES (12") SIDE CLEARANCE.
3. CONCRETE PAD SHALL BE CLASS B CONCRETE, 4" MINIMUM THICKNESS, REINFORCED WITH WELDED WIRE MESH.
4. WHERE SERVICE LINES SMALLER THAN 4" PASS UNDER A SIDEWALK, THEY SHALL BE INSTALLED IN A PVC CASING / SLEEVE AT LEAST 1" LARGER THAN THE SERVICE LINE AND EXTENDS AT LEAST 6" BEYOND THE EDGES OF THE SIDEWALK.
5. METAL PIPES EXPOSED TO SOIL OR CONCRETE SHALL BE POLY WRAPPED AND TAPED.
6. THE PORTION OF THE TRENCH FROM BACK OF METER TO THE DEVICE SHALL REMAIN OPEN UNTIL WATER DISTRIBUTION CROSS-CONNECTION PERSONNEL HAVE INSPECTED AND APPROVED THE INSTALLATION. CALL 669-600-7322.
7. THE TESTING SIDE OF THE DEVICE SHALL HAVE A MINIMUM 24" OF CLEARANCE FROM OBSTRUCTION (NON-TRIMMABLE LANDSCAPING, BUILDINGS, UTILITIES, ETC.) MULTIPLE BACKFLOW DEVICES SHALL BE SEPARATED BY A MINIMUM OF 18" AND BE OF EQUAL HEIGHT.
8. BOLLARDS MAY BE REQUIRED BY CITY TO PROVIDE ADDITIONAL PROTECTION.
9. BACKFLOW ASSEMBLIES INSTALLED ON PORTABLE WATER SERVICES SHALL BE LEAD FREE.
10. BACKFLOW ASSEMBLIES SHALL BE THE SAME SIZE OF THE WATER METER.
11. NO GALVANIZED PIPE OR DISSIMILAR METAL PIPE MAY BE USED.
12. ALL PIPES AND SPOOLS SHALL BE DUCTILE IRON PIPE WITH NO EXCEPTIONS AND ALL JOINTS FLANGED.
13. ALL BOLTS / NUTS SHALL BE STAINLESS STEEL COMPONENTS WITH NO EXCEPTIONS.

HORIZONTAL ORIENTATION DOMESTIC RP ASSEMBLY BACKFLOW PREVENTION DEVICE SIZE 3" AND LARGER	Sunnyvale	APPROVED BY:
	DATE: SEPTEMBER 2020	DWG. **20B-1**

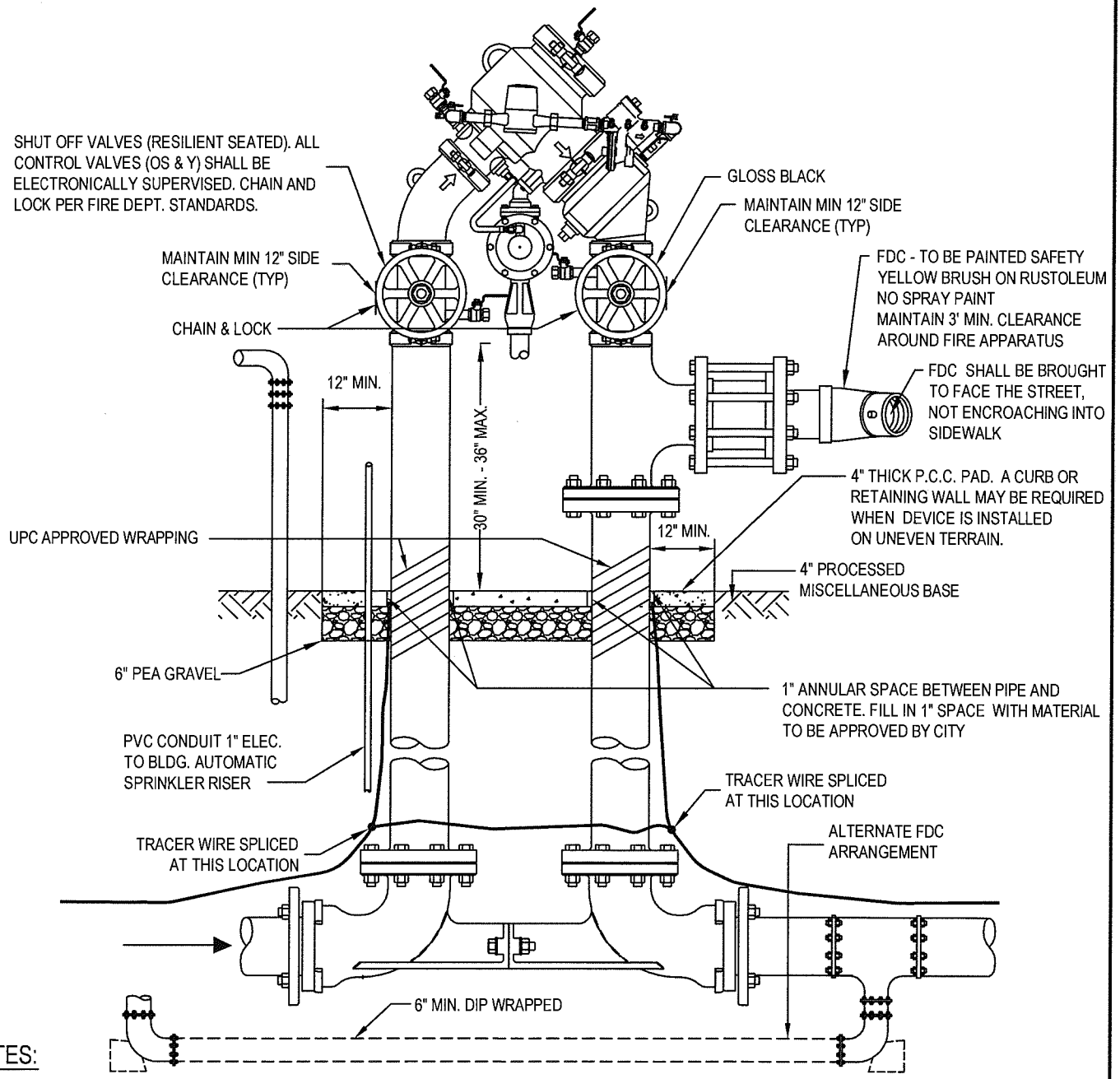

NOTES:

1. REDUCED PRESSURE DETECTOR ASSEMBLY SHALL BE WILKINS 475DA OR PRIOR APPROVED EQUAL (RPDA REQUIRED IF CHEMICALS ARE INTRODUCED TO SYSTEM).
2. FDC TO BE PAINTED SAFETY YELLOW AND REMAIN VISIBLE AND ACCESSIBLE.
3. ALL PIPES AND SPOOLS SHALL BE DUCTILE IRON WITH NO EXCEPTIONS AND ALL JOINTS FLANGED. DIP TO BE PROTECTED WRAP CA-1200 POLYGUARD CA-14 MASTIC OR APPROVED EQUAL. NO GALVANIZED PIPE IS TO BE INSTALLED.
4. ALL TRIM HARDWARE TO BE BRASS OR BRONZE WITH NO EXCEPTIONS.
5. RADIO READ METER FEE TO BE PAID AT TIME OF PERMIT APPLICATION (METER TO BE INSTALLED BY CITY).
6. UNDERGROUND FITTINGS TO BE FUSION EPOXY COATED, CONNECTIONS TO BE FLANGED OR MEGALUG WITH FLUOROPLYMER (TRIPAC) COATED BOLTS AND NUTS OR 316 STAINLESS STEEL BOLTS AND NUTS OR A COMBINATION OF THE TWO.
7. FOR SECTION VIEW PLEASE SEE 20B.
8. THE PORTION OF THE TRENCH FROM BACK OF METER SHALL REMAIN OPEN UNTIL WATER DISTRIBUTION PERSONNEL HAVE INSPECTED AND APPROVED THE INSTALLATION, CALL 669-600-7322.
9. BACKFLOW DEVICES SHALL BE LEAD FREE.

FIRE SERVICE - REDUCED PRESSURE DETECTOR ASSEMBLY (RPDA)	Sunnyvale APPROVED BY:	
	DATE : JUNE 30, 2006 **REVISED: JULY 2019**	DWG. **21B**

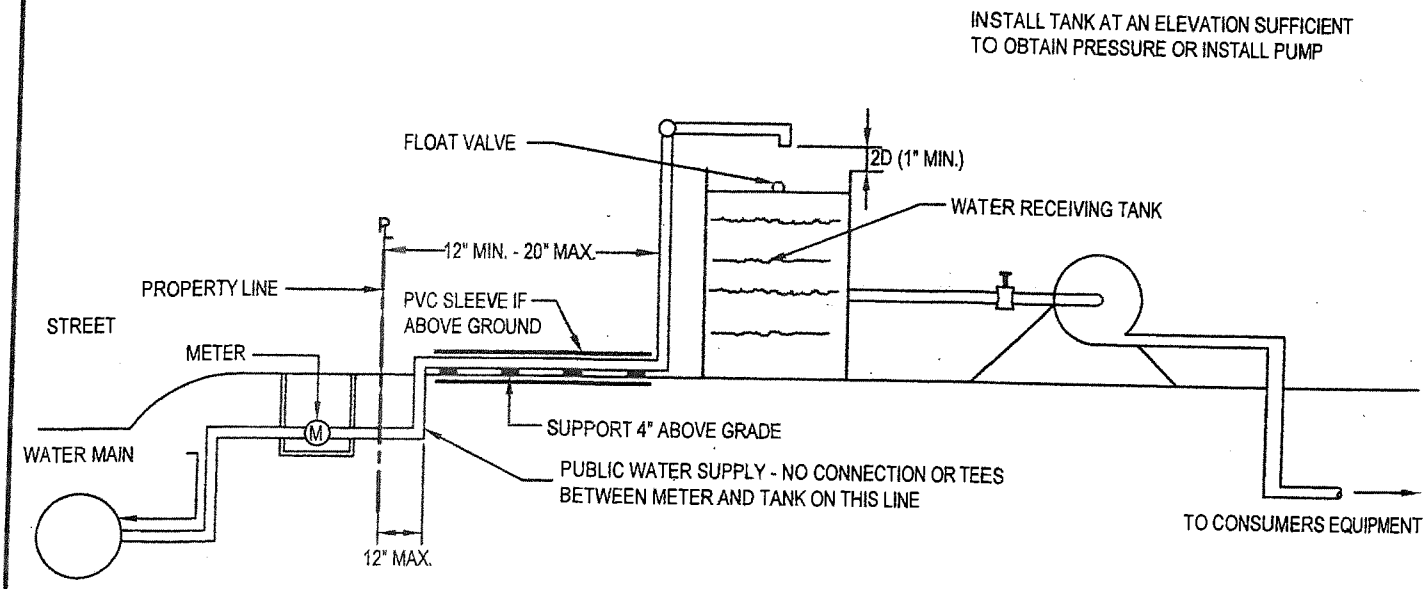

AIR GAP SEPARATION

NOTE:

1. TANK SHOULD BE OF SUBSTANTIAL CONSTRUCTION AND OF A KIND AND SIZE TO SUIT CONSUMERS NEEDS. TANK MAY BE SITUATED AT GROUND LEVEL (WITH A PUMP TO PROVIDE ADEQUATE PRESSURE HEAD) OR TO BE ELEVATED ABOVE GROUND.
2. THE METER SHALL REMAIN OFF UNTIL THE AIR GAP IS INSPECTED AND APPROVED BY THE WATER DISTRIBUTION PERSONNEL, CALL 408-730-7900.

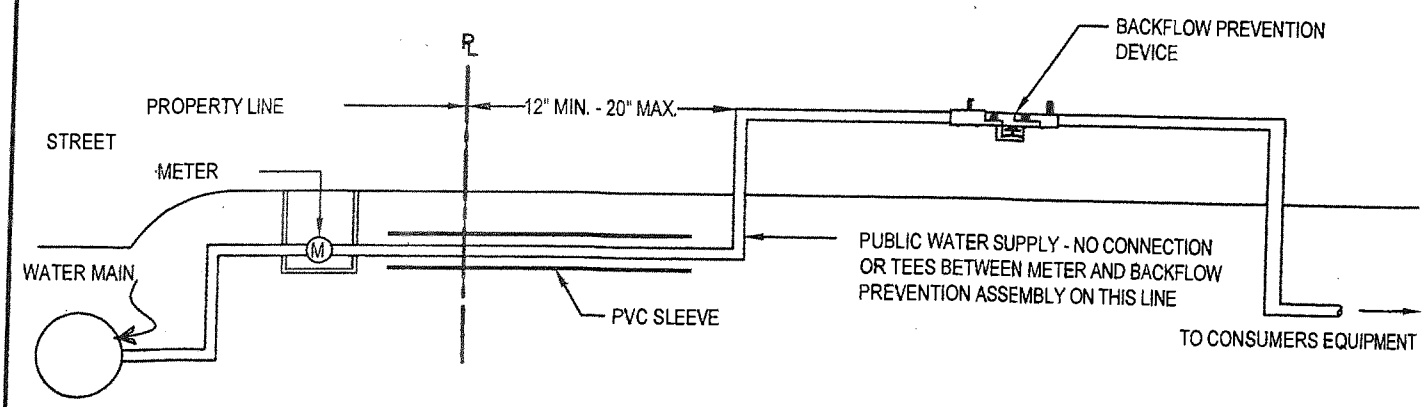

BACKFLOW PREVENTION ASSEMBLY

NOTE:

SEE DETAILS 18B & 18B-1

INSTALLATION OF BACKFLOW PREVENTION DEVICE	APPROVED BY:	
	DATE: JUNE 30, 2006 **REVISED: SEPTEMBER 2014**	**22B**

THRUST BLOCKS MISCELLANEOUS

NO SCALE

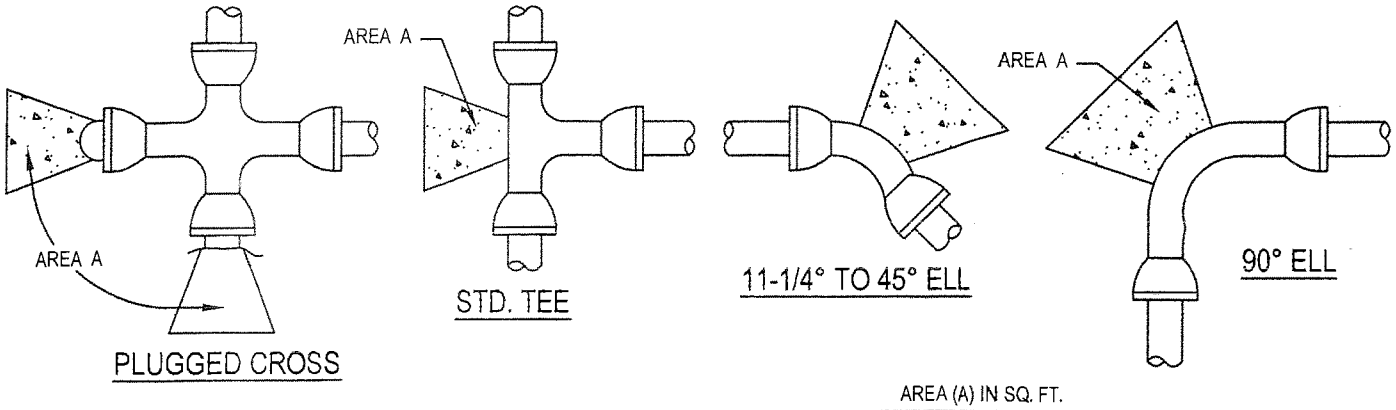

NOTE:

1. ALL THRUST BLOCKS SHALL BEAR AGAINST UNDISTURBED EARTH.
2. BASED ON SOIL BEARING VALUE OF 3,000 LBS. PER SQ. FT. AND WATER PRESSURE OF 200 PSI FORM AS REQUIRED TO KEEP HYDRAULIC FORCES OFF OF MECHANICAL JOINT OR FLANGE BOLTS.
3. PIPE SIZES GREATER THAN 12", PROVIDE DETAILED DESIGN FOR THRUST BLOCKS.
4. SAFE FACTORY IS 1.0.

AREA (A) IN SQ. FT.

TYPE OF FITTING	SIZE OF PIPE					
	2"	4"	6"	8"	10"	12"
90° ELL	1	2	3.5	6	9	13
45° ELL	1	1	2	3.5	5	7
22 1/2° ELL	1	1	1	2	2.5	3.5
11 1/4° ELL	1	1	1	1	1.5	2
TEE	1	1	2.5	4.5	6.5	9

THRUST BLOCKS FOR HORIZONTAL BENDS

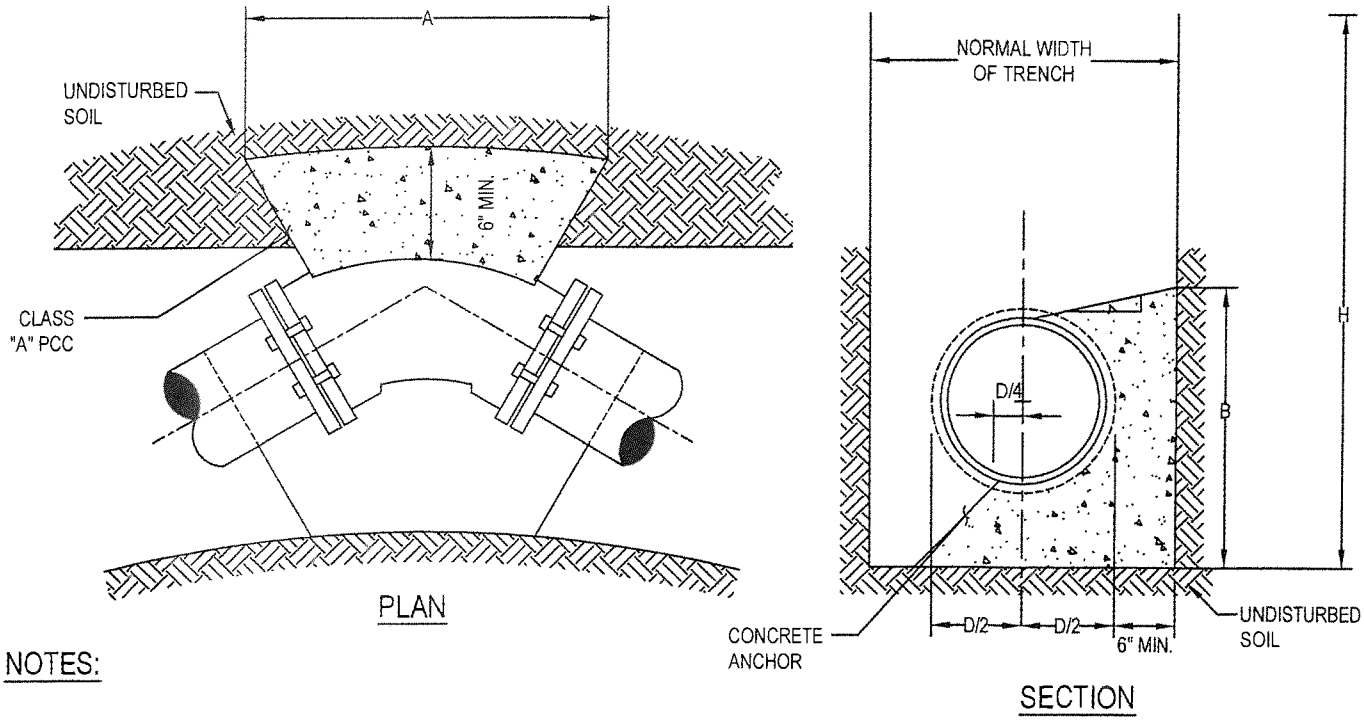

NOTES:

1. D = PIPE DIAMETER
2. WRAP FLANGES/BOLTS IN VISQUEEN
3. "A" DIMENSION MUST BE ATLEAST 2 TIMES THE "B" DIMENSION
4. "B" DIMENSION MUST BE LESS THAN HALF THE TOTAL DEPTH FROM THE GROUND SURFACE (H) (WIDTH SHALL BE AT LEAST TWICE THE HEIGHT)
5. A PASSIVE RESISTANT THRUST BLOCK IS REQUIRED IF THE HEIGHT OF THE THRUST BLOCK (B) IS GREATER THAN 0.5 TIMES THE DEPTH (H)
6. CONCRETE ANCHOR BLOCK3250 PSI AT 28 DAYS

THRUST BLOCKS

APPROVED BY:

DATE : JUNE 30, 2006
REVISED: SEPTEMBER 2014

DWG. 23B

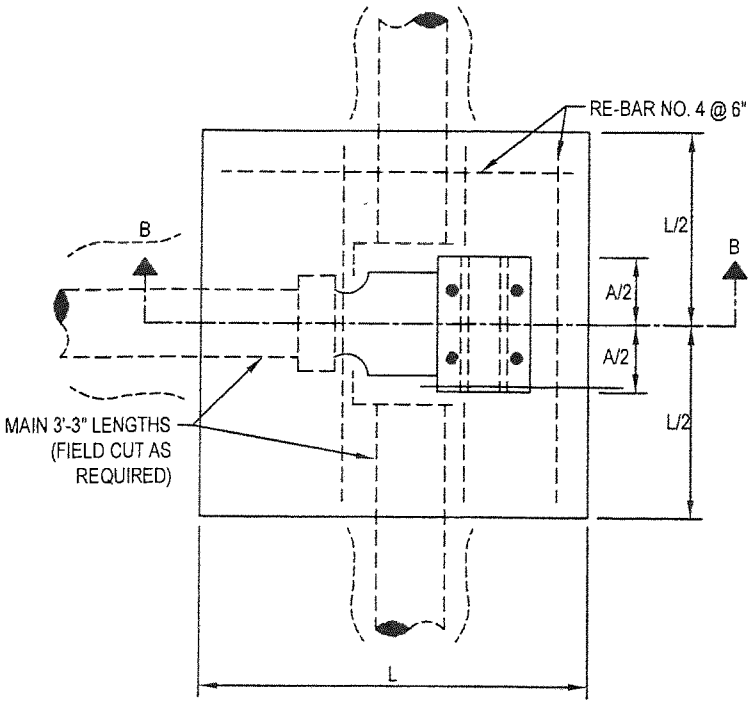

PLAN

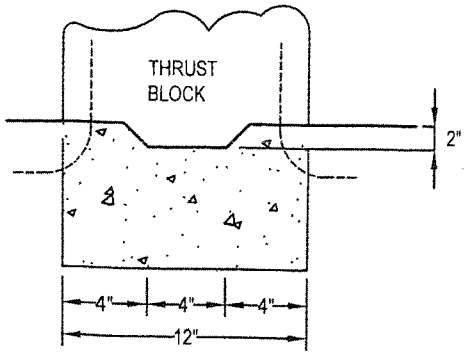

KEY DETAIL

NOTES:

1. ALL FITTING JOINTS WILL BE CLEAR OF ALL CONCRETE.
2. CONCRETE SHALL BE TYPE V.
3. USE 3' LENGTHS OF PIPE ONE EACH SIDE EVERY FITTING.

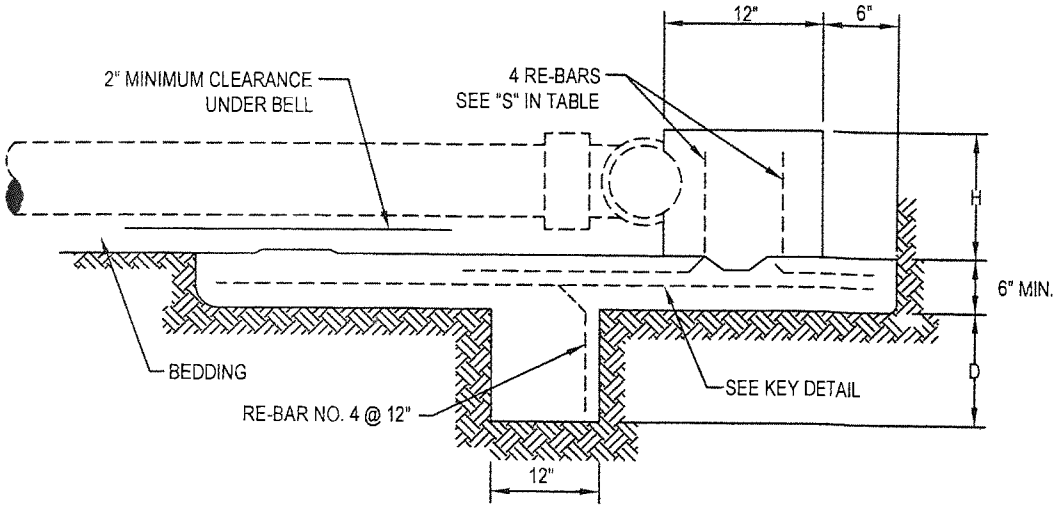

SECTION B-B

DIMENSION TABLE FOR TEE AND DEAD ENDS						
PIPE DIAMETER	TEE A	DEAD END A	D	H	L	RE-BAR "S" SIZE
6"	16"	8"	12"	12"	4'	NO. 4
8"	18"	10"	12"	14"	4'	NO. 4
10"	22"	12"	24"	16"	4'	NO. 5
12"	24"	14"	36"	18"	5'	NO. 6

NO SCALE

THRUST BLOCKS IN BAY MUD - 1 OF 2

APPROVED BY:

DATE : JUNE 30, 2006

REVISED: SEPTEMBER 2015

DWG. 24B

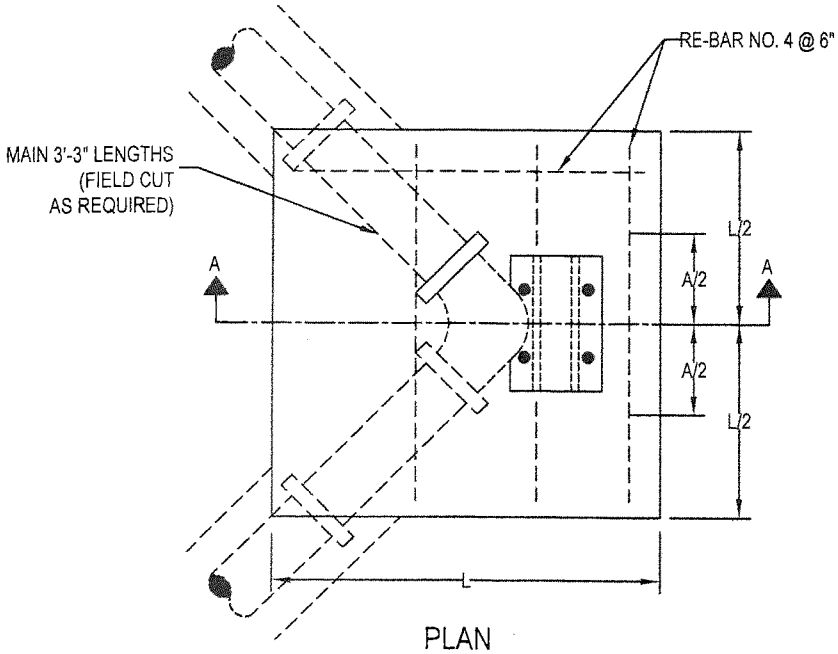

PLAN

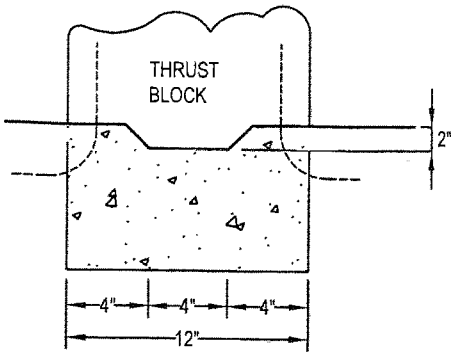

KEY DETAIL

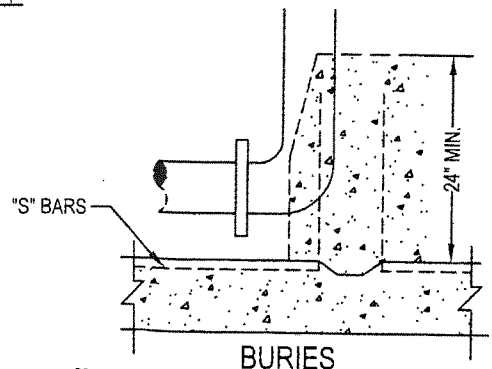

BURIES

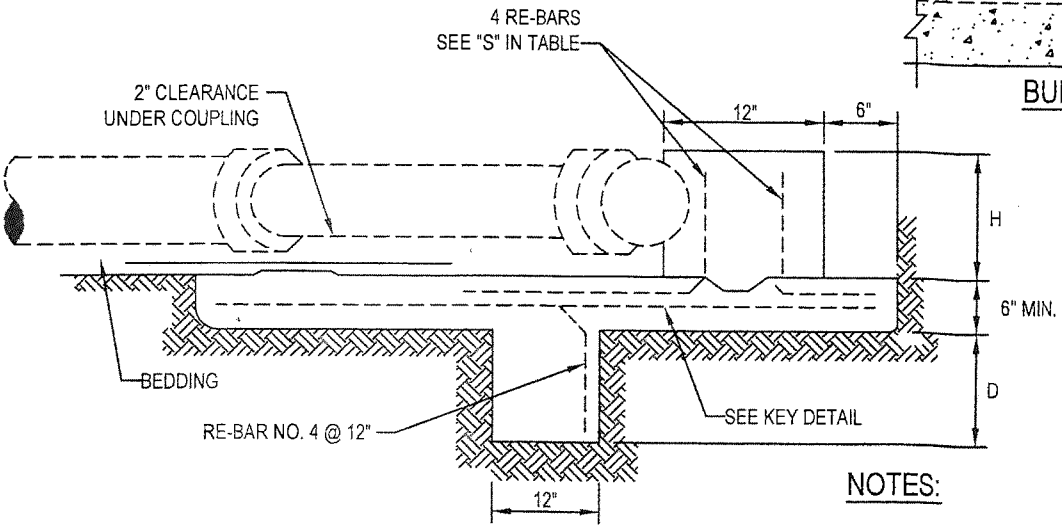

SECTION A-A

NOTES:

1. ALL FITTING JOINTS WILL BE CLEAR OF ALL CONCRETE.
2. CONCRETE SHALL BE TYPE V.
3. USE 3' LENGTHS OF PIPE ONE EACH SIDE EVERY FITTING.

DIMENSION TABLE FOR HORIZONTAL BENDS

PIPE DIAMETER	90 DEG BEND					45 DEG BEND					22 DEG 30' BEND					11 DEG 15' BEND				
	A	D	H	L	RE - BAR "S" SIZE	A	D	H	L	RE - BAR "S" SIZE	A	D	H	L	RE - BAR "S" SIZE	A	D	H	L	RE - BAR "S" SIZE
6"	15"	12"	12"	4'	NO. 4	10"	12"	12"	3'	NO. 4	8"	6"	12"	3'	NO. 4	7"	6"	12"	3'	NO. 4
8"	18"	12"	14"	4'	NO. 4	12"	12"	14"	4'	NO. 4	9"	6"	14"	3'	NO. 4	8"	6"	14"	3'	NO. 4
10"	23"	24"	16"	5'	NO. 5	13"	12"	16"	4'	NO. 5	11"	12"	16"	4'	NO. 4	9"	6"	16"	3'	NO. 5
12"	26"	36"	18"	5'	NO. 6	15"	24"	18"	4'	NO. 5	13"	12"	18"	4'	NO. 4	10"	6"	18"	4'	NO. 5

NO SCALE

THRUST BLOCKS IN BAY MUD - 2 OF 2

APPROVED BY:

DATE : JUNE 30, 2006
REVISED: SEPTEMBER 2015

DWG. **25B**

NOTES:

1. ALL BOND CABLE SHALL BE INSTALLED AT MINIMUM LENGTH.
2. BOND CABLES SHALL NOT BE INSTALLED ACROSS INSULATING JOINTS.
3. ONE ADDITIONAL CABLE SHALL BE REQUIRED FOR PIPE DIAMETERS FROM 36" TO 48" AND 2 MORE FOR DIAMETERS LARGER THAN 48".
4. BOND CABLES ARE TO BE INSTALLED ONLY AT THE RECOMMENDATION OF THE DESIGN ENGINEER AND WITH THE APPROVAL OF THE CITY ENGINEER.

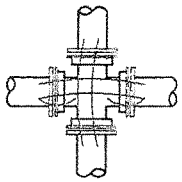

CROSS

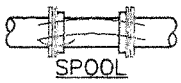

SPOOL

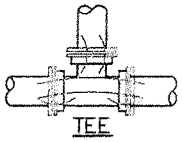

TEE

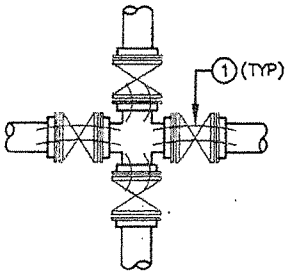

VALVE CROSSING

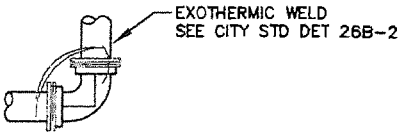

BEND

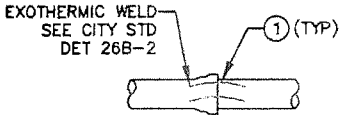

BELL AND SPIGOT PIPE JOINT

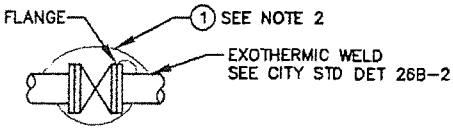

BOND ACROSS FLANGES

FLANGED VALVE

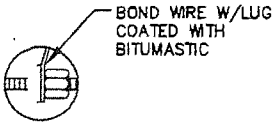

DETAIL A

WIRE CONNECTION TO FLANGE BOLT SEE NOTE 4

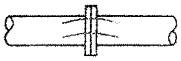

FLANGED OR MECHANICAL PIPE JOINT

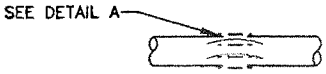

FLEXIBLE COUPLING PIPE JOINT

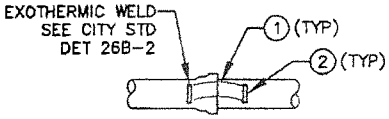

NON-MORTAR LINED BELL AND SPIGOT

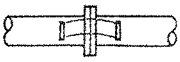

NON-MORTAR LINED FLANGED

ITEM CALL OUT:

1. BOND CABLE: AWG #6
   STRANDED: ASTM B8
   COPPER: ASTM B3
   INSULATED: ASTM D1248
   TYPE 1, CLASS C, GRADE 5
2. STEEL PLATE, 1/8" THICK
   WELD TO THE PIPE.

EXOTHERMIC WELDING DETAIL - 1	APPROVED BY:	
	DATE : DEC 2014 REVISED : –	DWG. 26B - 1

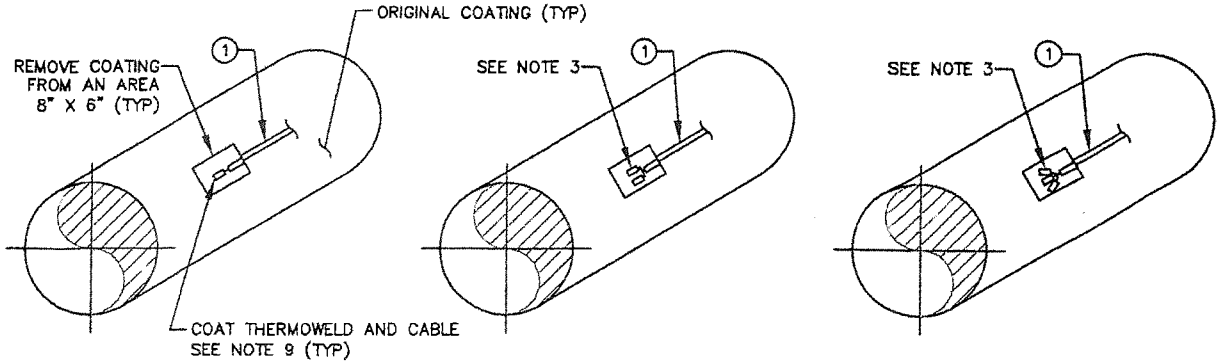

DETAIL 1

CONNECTIONS OF #6 AWG CABLE AND SMALLER (TYP)

DETAIL 2

CONNECTIONS OF #4 AWG CABLE (TYP)

DETAIL 3

CONNECTIONS OF #2 AWG CABLE AND LARGER (TYP)

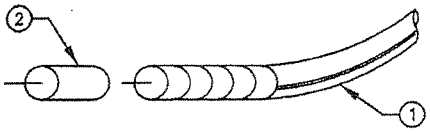

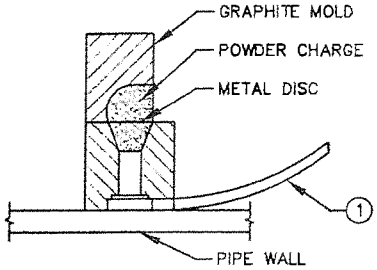

EXOTHERMIC CONNECTION DETAIL

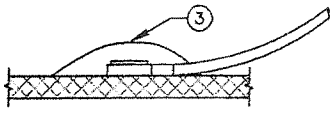

EXOTHERMIC CONNECTION SECTION

NOTES:

1. CLEAN AREA OF STEEL SURFACE APPROXIMATELY 2"X2" FOR EACH THERMOWELD CONNECTION. WIRE BRUSH FILE AND SCRAPE TO OBTAIN SSPC-SP-5 WHITE METAL SURFACE FINISH.
2. SELECT PROPER MOLD BASED ON STRUCTURE GEOMETRY, ORIENTATION, AND MATERIAL TYPE.
3. STRIP CABLE END AND TWIST TO FIT THERMOWELD MOLD. CABLE SIZES LARGER THAN #6 AWG SHALL BE THERMOWELDED BY TWISTING CONDUCTORS INTO GROUPS APPROXIMATELY #6 AWG CABLE SIZE. MINIMUM SPACING BETWEEN WELDS SHALL BE DETERMINED BY MOLD GEOMETRY, NOMINALLY 3".
4. HOLD MOLD FIRMLY AGAINST PIPE WITH OPENING AWAY FROM THE OPERATOR. IGNITE WITH WELDING FLINT LIGHTER.
5. REMOVE ALL WELD SLAG, SPLATTER, SHARP EDGES, AND BURBS WITH CHIP HAMMER AND METAL FILE.
6. TEST STRENGTH OF CONNECTION BY LIGHTLY TAPPING WITH 1 LB HAMMER, AND PULL WITH 5 LB FORCE ON CABLE.
7. WIPE PIPE SURFACE WITH CLEAN, OIL FREE RAGS TO REMOVE ANY LOOSE DUST.
8. PRIME CLEANED SURFACE WITH APPROVED PRIMER.
9. COAT THERMOWELD AND 6" OF CABLE TAIL WITH COMPATIBLE COATING, SUCH THAT ALL CORNERS ARE FILLED. THE COATING SHALL EXTEND FOR AT LEAST 2" AROUND THE THERMOWELD.
10. THERMOWELD CARTRIDGE SIZE SHALL BE COMPATIBLE TO STEEL MATERIALS. MULTIPLE POWER CARTRIDGE CHARGERS SHALL NOT BE USED. IF A THERMOWELD MUST BE REPEATED, A NEW PIPE SURFACE MUST BE PREPARED AT LEAST 3" FROM THE ORIGINAL WELD ATTEMPT. MORE THAN ONE WELD ATTEMPT ON THE SAME SPOT SHALL NOT BE PERMITTED.
11. IN NON-CONCRETE LINED PIPES, ALL EXOTHERMIC WELDS SHALL BE MADE IN A STEEL PAD.

CABLE SIZE	NO. OF STRANDS	NO. OF EXOTHERMIC GROUPS PER CABLE CONNECTION	CABLE STRANDS PER GROUP
8	19	1	19
6	7	1	7
	19		19
4	7	2	3-4
	19		10-9
2	7	3	3-2-2
	19		7-6-6

ITEMS CALL OUT:

1. CABLE: AWG SIZE, ASTM B388 ASTM D-1248, TYPE 1, CLASS C, GR5 INSULATION
2. SLEEVE: ADAPTER
3. APPROVED PRIMER AND WELD CAP OR MORTAR OVER WELD LOCATION

EXOTHERMIC WELDING DETAIL - 2

APPROVED BY:

DATE : DEC 2014

REVISED : -

DWG. 26B - 2

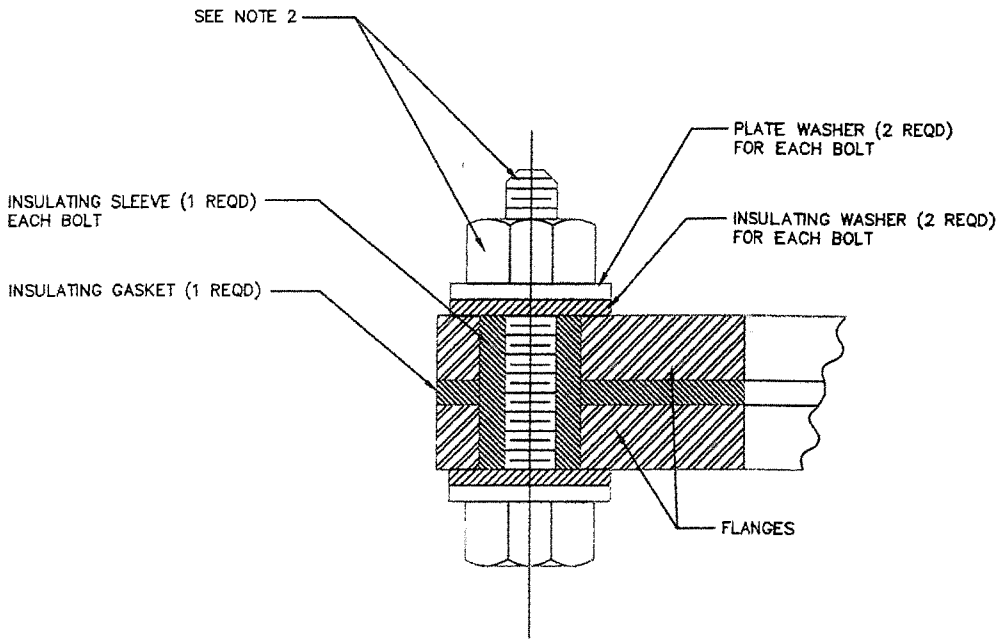

NOTES:

1. WHEREVER POSSIBLE INSULATING FLANGE ASSEMBLIES SHALL BE ASSEMBLED PRIOR TO INSTALLATION AND TESTED ELECTRICALLY USING GAS ELECTRONIC TOOL OR APPROVED EQUAL TO INSURE THAT THE INSTALLATION IS EFFECTIVE.
2. POLYWRAP BELOW GROUND INSULATING FLANGE ASSEMBLIES WITH APPROVED TAPE PER AWWA C217.
3. INSULATING FLANGE BOLT HOLE DIAMETER SHALL BE ⅛ INCH BIGGER THAN THE INSULATING SLEEVE OUTSIDE DIAMETER.
4. TORQUE BOLTS PER INSULATING FLANGE SET MANUFACTURERS RECOMMENDATIONS.

INSULATING FLANGE DETAIL	APPROVED BY:	
	DATE : DEC 2014 REVISED : –	DWG. 27B

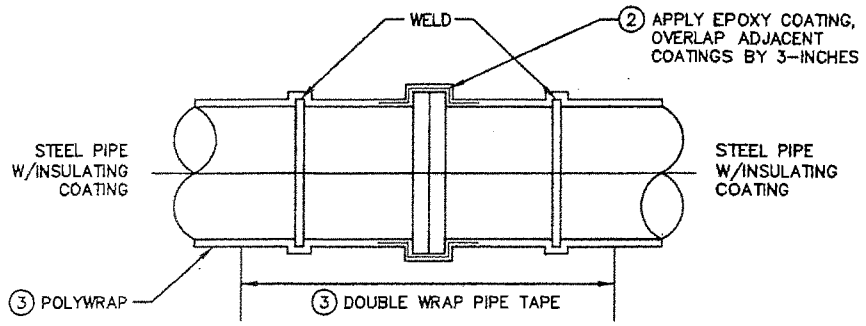

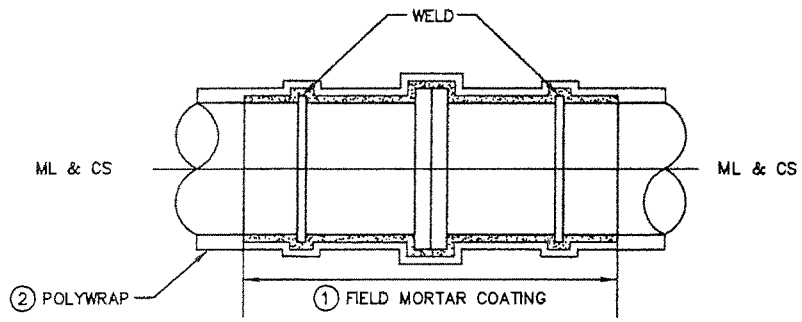

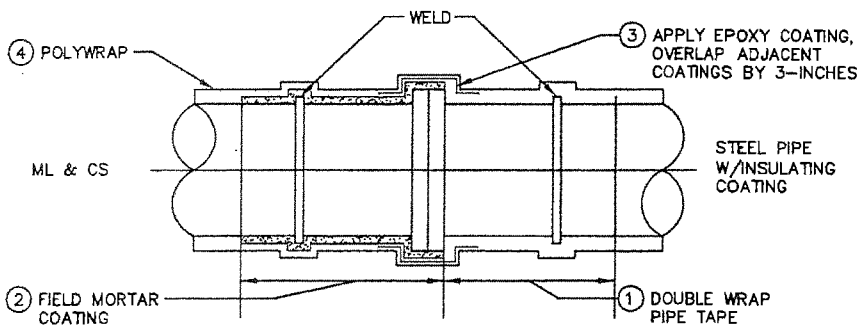

NOTES:

1. NUMBERS IN CIRCLES INDICATE SEQUENCE OF COATING OPERATION.
2. "ML & CS" IS MORTAR LINED AND COATED STEEL PIPE.
3. WHERE CEMENT MORTAR COATED CI PIPE IS ENCOUNTERED, FIELD COATING SHALL BE THE SAME AS FOR ML & CS.
4. INSULATING COATING INCLUDES COAL TAR ENAMEL, PLASTIC AND COAL TAR EPOXY.
5. FIELD MORTAR COATING TO A MINIMUM THICKNESS OF ¾ INCH SHALL BE APPLIED OVER A 2" X 4" 0.5 WIRE MESH REINFORCEMENT. DO NOT BRIDGE FLANGES WITH WIRE MESH OR TIE RODS.
6. BACKFILL TO BE FREE OF ROCKS AND CLODS. AVOID DAMAGE TO COATING DURING BACKFILLING OPERATIONS;
7. POLYWRAP, EPOXY COATING, AND PIPE TAPE SHALL CONFORM TO CITY STD SPECIFICATIONS. EXTEND POLYWRAP AT LEAST 12 INCHES ONTO UNDISTURBED PIPE EACH SIDE OF INSULATING JOINT.
8. ASSEMBLE ALL FLANGED INSULATING JOINTS IN THE SHOP WHENEVER POSSIBLE AND CALL CITY ENGINEER TO CHECK THEM BEFORE INSTALLING.

FLANGED STEEL INSULATING JOINT INSTALLATION DETAILS - 1	APPROVED BY:	
	DATE : DEC 2014 REVISED : –	DWG. 27B-1

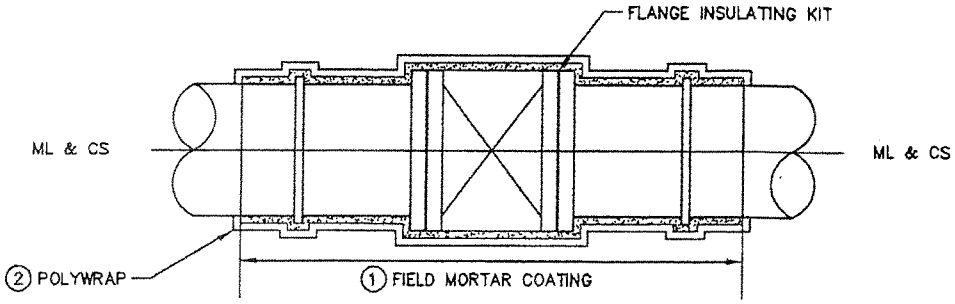

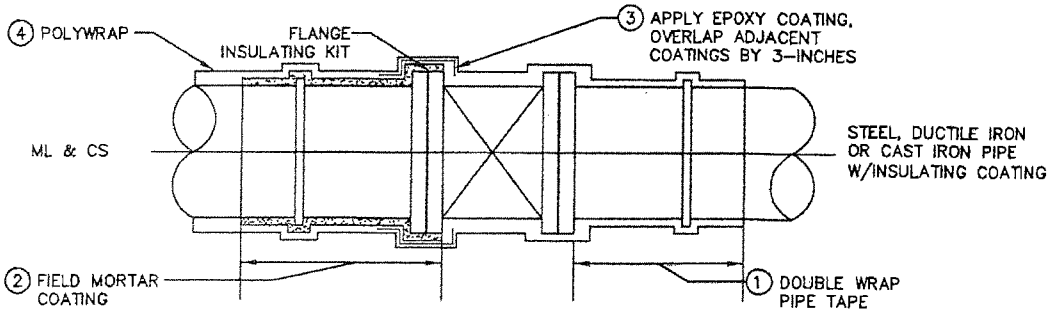

NOTES:

1. NUMBERS IN CIRCLES INDICATE SEQUENCE OF COATING OPERAITON.
2. "ML & CS" IS MORTAR LINED AND COATED STEEL PIPE.
3. WHERE CEMENT MORTAR COATED CI PIPE IS ENCOUNTERED, FIELD COATING SHALL BE THE SAME AS FOR ML & CS.
4. INSULATING COATING INCLUDES COAL TAR ENAMEL, PLASTIC AND COAL TAR EPOXY.
5. FIELD MORTAR COATING TO A MINIMUM THICKNESS OF 3/4" SHALL BE APPLIED OVER A 2" X 4" 0.5 WIRE MESH REINFORCEMENT. DO NOT BRIDGE FLANGES WITH WIRE MESH OR TIE RODS.
6. BACKFILL TO BE FREE OF ROCKS AND CLODS. AVOID DAMAGE TO COATING DURING BACKFILLING OPERATIONS;
7. POLYWRAP, EPOXY COATING, AND PIPE TAPE SHALL CONFORM TO CITY STD SPECIFICATIONS. EXTEND POLYWRAP AT LEAST 12 INCHES ONTO UNDISTURBED PIPE EACH SIDE OF INSULATING JOINT.
8. ASSEMBLE ALL FLANGED INSULATING JOINTS IN THE SHOP WHENEVER POSSIBLE AND CALL CITY FOR INSPECTION PRIOR TO INSTALLING.

FLANGED FITTING INSULATING JOINTS INSTALLATION DETAIL - 2	APPROVED BY:	
	DATE : DEC 2014 REVISED : -	DWG. 27B-2

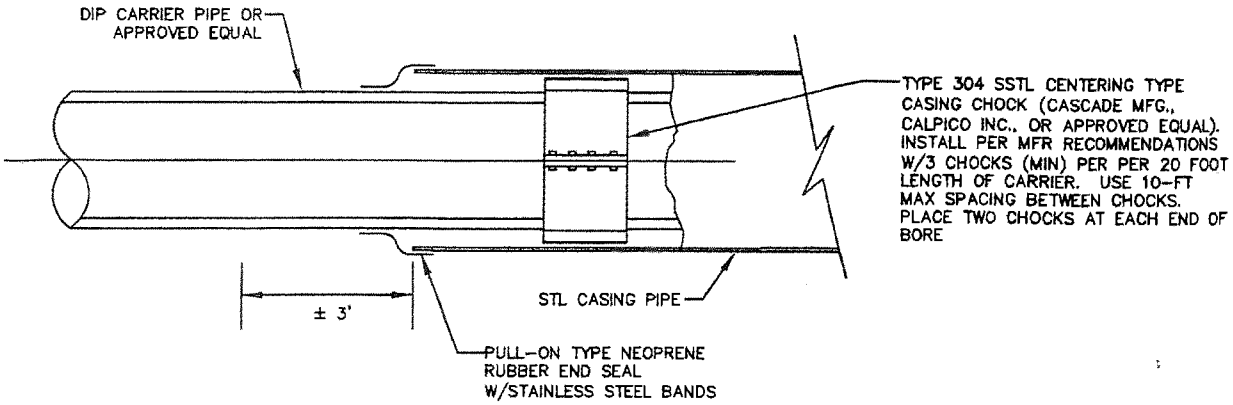

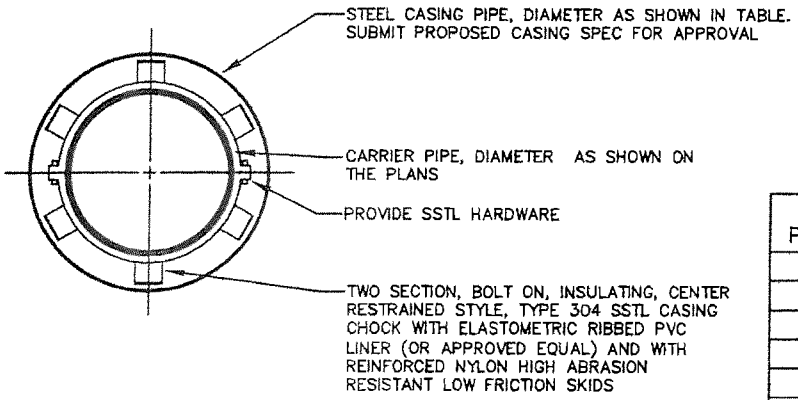

CARRIER PIPE DIAMETER	MINIMUM CASING DIAMETER REQ'D
6"	12"
8"	16"
12"	20"
15"	24"
18"	30"
24"	36"
>24"	BY ENGINEER

NOTES:

1. BORINGS SHALL BE AT 90 DEGREES TO ALL CROSSINGS UNLESS OTHERWISE APPROVED. THE BORING OF THE HOLE AND INSTALLATION OF THE CASING PIPE SHALL BE SIMULTANEOUS. BORE HOLE DIAMETER SHALL ESSENTIALLY BE THE SAME AS THE OUTSIDE DIAMETER OF THE CASING PIPE TO BE INSTALLED.
2. STEEL PIPE CASING SHALL BE SMOOTH STEEL PIPE FABRICATED IN SECTIONS IN ACCORDANCE WITH AWWA C201. LENGTHS OF CASING PIPE SHALL BE AS LONG AS PRACTICAL FOR SITE CONDITIONS.
3. JOINTS SHALL CONFORM TO THE REQUIREMENTS OF AWWA C206. JOINTS BETWEEN SECTIONS SHALL BE COMPLETELY WELDED TO THE PRECEDING SECTIONS. PRIOR TO WELDING JOINTS, THE CONTRACTOR SHALL ENSURE THAT BOTH ENDS OF THE CASING SECTIONS BEING WELDED ARE SQUARE.
4. STEEL PIPE CASING WALL THICKNESS SHALL BE AS SPECIFIED BY DESIGN ENGINEER. VERIFY CASING SIZES AND SIZING OF CASING INSULATORS PRIOR TO ORDERING.
5. CASING END SEALS SHALL BE SYNTHETIC NEOPRENE RUBBER PULL-ON TYPE END SEALS WITH STAINLESS STEEL BANDS.
6. FOR OPEN TRENCH INSTALLATIONS, THE CASING SHALL BE SUPPORTED BY A MINIMUM OF TWO (2) CONCRETE SUPPORT PADS AT BOTH ENDS. MORE SUPPORT MAY BE REQUIRED DEPENDING ON SITE CONDITIONS.
7. ANNULAR SPACE BETWEEN CASING AND CARRIER PIPE SHALL REMAIN FREE OF MATERIAL UNLESS OTHERWISE APPROVED BY THE CITY ENGINEER.
8. CHOCK SHALL PROVIDE A MINIMUM CLEARANCE OF ¾ INCH BETWEEN THE CARRIER PIPE'S GREATEST OUTSIDE DIAMETER AND THE CASING PIPE'S INSIDE DIAMETER.
9. ALL JOINTS WITHIN THE CASING SHALL BE FULLY RESTRAINED.

PIPE CASING DETAIL

APPROVED BY:

DATE : DEC 2014
REVISED : –

DWG. 28B

TOP VIEW

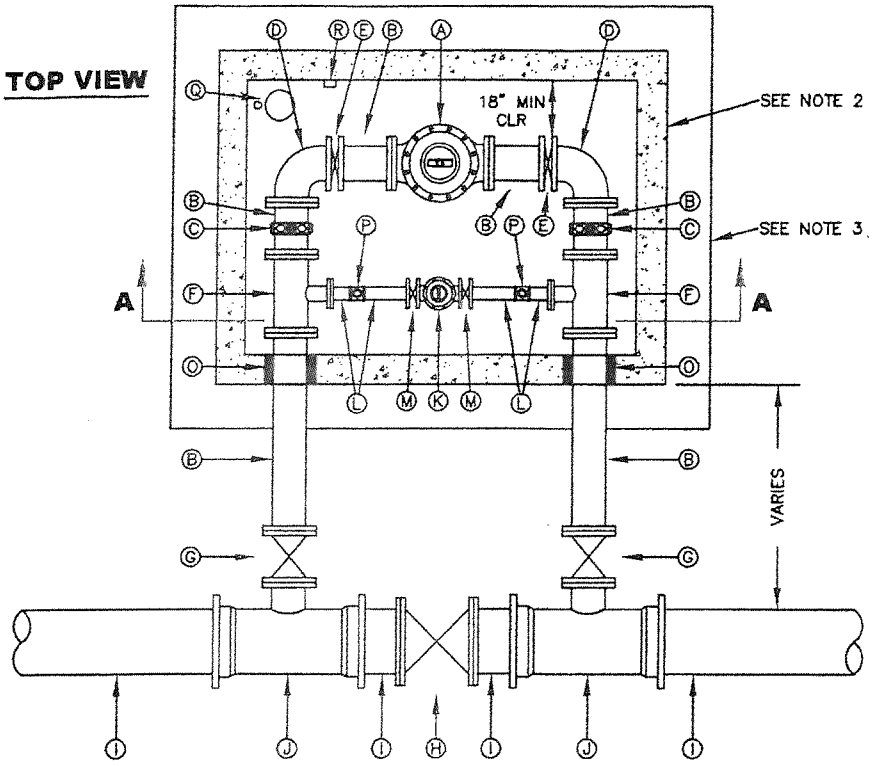

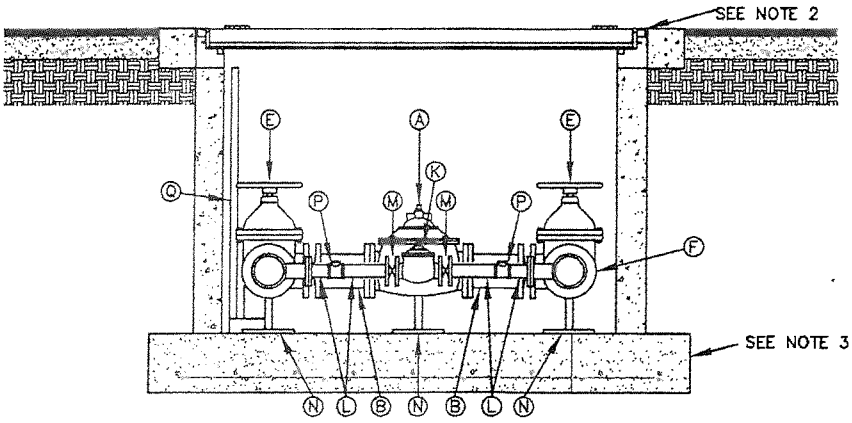

SECTION A-A

NOTES:

1. INSTALLATION SHALL GENERALLY BE FOR A MAIN-LINE 12 INCH AND SMALLER. INSTALLATION OF OTHER SIZED VALVES IS SIMILAR.
2. VALVE VAULT LID SHALL BE A HYDRAULICALLY ASSISTED DOUBLE LEAF H-20 ALUMINUM COVER. VALVE VAULT SHALL BE BY JENSEN PRECAST OR APPROVED EQUAL. VAULT DIMENSIONS SHALL BE SIZED APPROPRIATELY TO ACCOMMODATE ALL APPURTENANCES AND MUST BE APPROVED BY THE CITY'S WATER OPERATIONS DIVISION.
3. CONCRETE FOOTING SHALL EXTEND 12 INCH MINIMUM ON ALL SIDES OF VALVE VAULT WALLS. FOOTING SHALL BE CONSTRUCTED WITH No.5 REBAR AT 12 INCH ON CENTER EACH WAY.
4. SUMP PUMP SHALL BE BY DAYTON PUMPS OR CITY APPROVED EQUAL.
5. FLOOR SHALL BE SLOPED TOWARDS SUMP PUMP DRAIN.
6. SUMP PUMP SHALL BE 12 INCH DIAMETER AND BE PARTIALLY FILLED WITH 1/2 INCH DRAIN ROCK. THE DRAIN PIPING SHALL BE PVC HARD PLUMBED TO THE TOP OF THE VAULT CORNER WITH MALE QUICK CONNECTION.
7. VAULT FLOOR SHALL NOT EXCEED 6 FEET IN DEPTH UNLESS APPROVED BY THE CITY ENGINEER.
8. A VERTICAL FIBERGLASS LADDER SHALL BE INSTALLED IN POWDER COATED SAFETY YELLOW WITH NON-SLIP LADDER RUNGS AND WITH A LADDER-UP SAFETY POST, AS MANUFACTURED BY BILCO OR CITY APPROVED EQUAL. LOCATION OF LADDER SHALL BE AS APPROVED BY CITY ENGINEER.
9. ELECTRICAL OUTLET SHALL BE INSTALLED IN PRV VAULT IF FEASIBLE. CONSULT CITY ENGINEER REGARDING IF THIS REQUIREMENT CAN BE WAIVED.

ITEM CALL OUT:

A. FLANGED PRESSURE REDUCING VALVE WITH SURGE RELIEF PILOT FOR HIGH FLOWS.
B. FLANGED DUCTILE IRON SPOOL.
C. TAPPING SADDLE WITH CORPORATION STOP, BRONZE TEE, AND 3/4 INCH PLUGS.
D. FLANGED 90° BEND.
E. BUTTERFLY VALVE.
F. FLANGED REDUCING TEE.
G. FLANGED GATE VALVE WITH VALVE BONNET BOX AND COVER.
H. GATE VALVE (CLOSED) SIZE AS SPECIFIED, WITH VALVE BONNET BOX, COVER, AND STAR NUT.
I. MAINLINE, SIZE AS SPECIFIED.
J. MECHANICAL JOINT REDUCING TEE WITH FLANGED BRANCH, MAINLINE SIZE AND BRANCH SIZE AS SPECIFIED.
K. FLANGED PRESSURE REDUCING VALVE WITH SURGE RELIEF PILOT FOR LOW FLOWS.
L. FLANGED BRASS OR DUCTILE IRON SPOOL.
M. BUTTERFLY VALVE.
N. VALVES INSTALLED WITH PIPE SUPPORTS AS REQUIRED.
O. WALL SLEEVES AND RUBBER SEAL.
P. TAPPING SADDLE WITH CORPORATION STOP, BRONZE TEE, AND 3/4 INCH PLUGS.
Q. SUMP PUMP AND PIPING. SEE NOTES 4, 5, AND 6.
R. ELECTRICAL OUTLET. SEE NOTE 9.

BYPASS PRESSURE REDUCING VALVE VAULT DETAIL

APPROVED BY:

DATE : DEC 2014	DWG.	29B
REVISED : -		

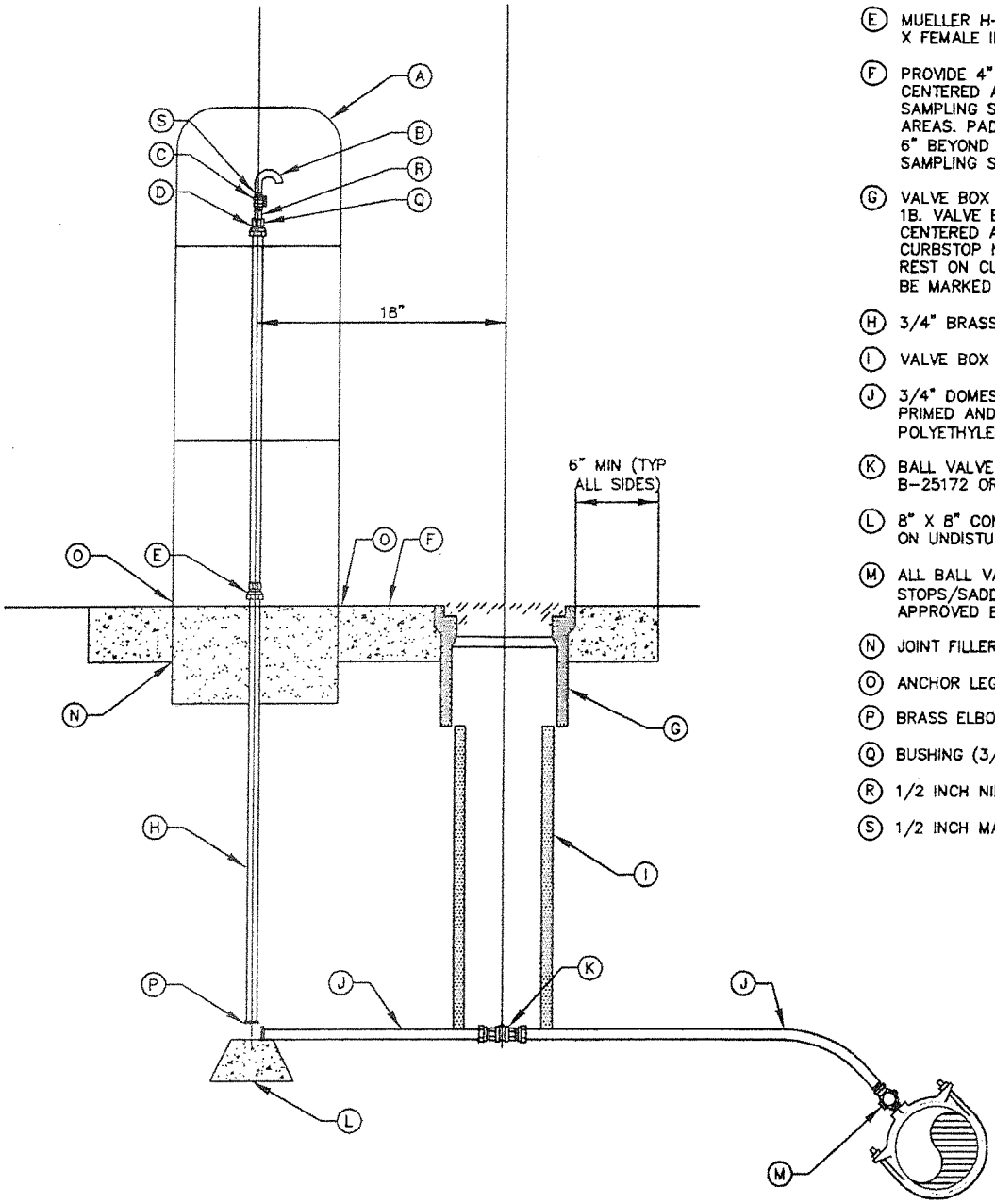

ITEM CALL OUT:

(A) SAMPLING STATION HOUSING. PIPELINE PRODUCTS WTS-85BE OR APPROVED EQUAL. (COLOR – HUNTER GREEN). MAINTAIN 24" CLEAR SPACE ON ALL SIDES.

(B) 120° BEND 1/2" DOMESTIC COPPER SOFT TYPE K.

(C) 1/2" BALL VALVE X FEMALE IP.

(D) MUELLER H-15451: 3/4 COMPRESSION X FEMALE IP.

(E) MUELLER H-15451: 3/4" COMPRESSION X FEMALE IP.

(F) PROVIDE 4" THICK CONCRETE PAD CENTERED AROUND VALVE BOX AND SAMPLING STATION IF OUTSIDE OF PAVED AREAS. PAD SHALL EXTEND A MINIMUM OF 6" BEYOND ALL SIDES OF VALVE BOX AND SAMPLING STATION.

(G) VALVE BOX ASSEMBLY PER CITY STD DET 1B. VALVE BOX ASSEMBLY SHALL BE CENTERED AND PLUM ON AXIS OF CURBSTOP NUT. VALVE BOX SHALL NOT REST ON CURBSTOP ASSEMBLY. LID SHALL BE MARKED 'WATER'.

(H) 3/4" BRASS.

(I) VALVE BOX 8" PVC SCH 40 RISER.

(J) 3/4" DOMESTIC COPPER SOFT TYPE K PRIMED AND TAPED WITH 20 MIL POLYETHYLENE TAPE-1/2 LAPPED.

(K) BALL VALVE CURBSTOP.SHALL BE MUELLER B-25172 OR CITY APPROVED EQUAL.

(L) 8" X 8" CONCRETE PIER BLOCK RESTING ON UNDISTURBED NATIVE SOIL.

(M) ALL BALL VALVES/CORPORATION STOPS/SADDLES SHALL BE MUELLER OR APPROVED EQUAL.

(N) JOINT FILLER

(O) ANCHOR LEGS (3 REQUIRED)

(P) BRASS ELBOW

(Q) BUSHING (3/4 TO 1/2 INCH)

(R) 1/2 INCH NIPPLE

(S) 1/2 INCH MALE IP X 1/2 COMPRESSION

SAMPLE STATION DETAIL

APPROVED BY:

DATE : DEC 2014	DWG.	30B-1
REVISED : –		

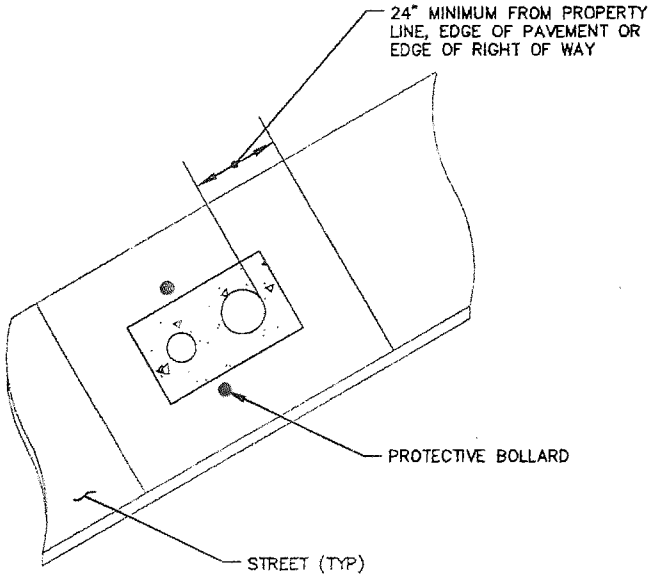

NO CURB OR ROLLED CURB

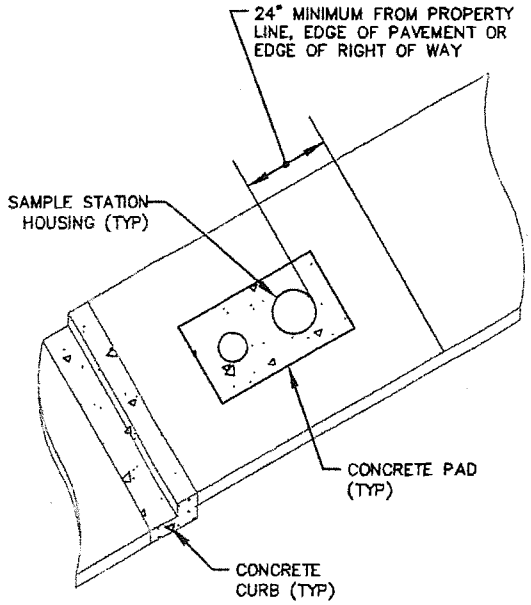

WITH CURB AND NO SIDEWALK

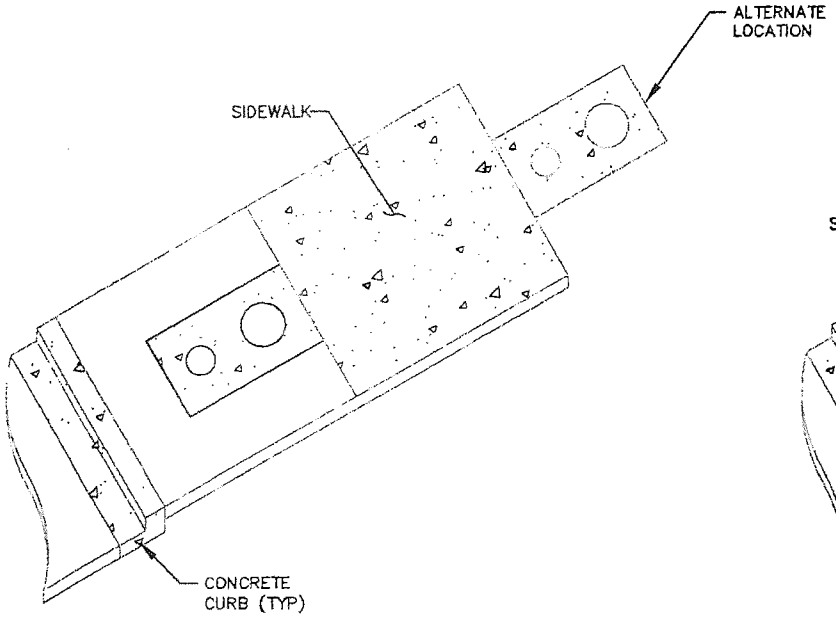

NON-CONTIGUOUS SIDEWALK

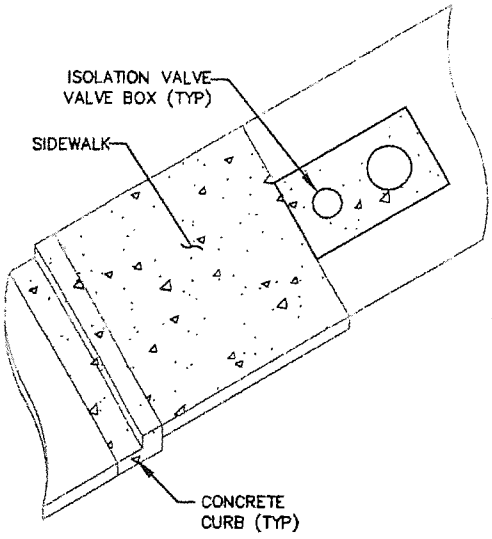

CONTIGUOUS SIDEWALK

SAMPLE STATION LOCATION	APPROVED BY:	
	DATE : DEC 2014 REVISED : –	DWG. **30B-2**

ASPHALT CONCRETE, CAST IRON, AND DUCTILE IRON MAINS

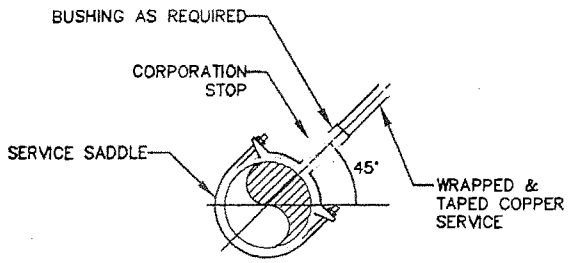

1" – 2" CONNECTIONS

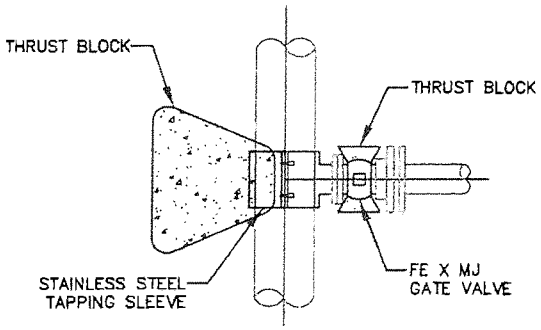

4" – 12" CONNECTIONS

NOTES:

1. REPAIR OR REPLACE MORTAR IN KIND AS REQUIRED.
2. WHEN MAIN IS POLYWRAPPED, REPAIR, AND EXTEND POLYWRAP TO COVER 6 INCHES OF SERVICE LINE.
3. MACHINE BORE AFTER WELDING (CUTTER O.D. SHALL BE ½ INCH LESS THAN NOMINAL SIZE).
4. STEEL PIPE FLANGE SHALL BE PERPENDICULAR TO SURFACE.
5. DIELECTRIC INSULATING FLANGE KIT SHALL BE INSTALLED BETWEEN VALVE AND TAPPING SLEEVE.
6. DIELECTRIC INSULATING CORPORATION STOP SHALL BE USED ON ALL TAPS 1–2 INCHES.
7. WELDS SHALL HAVE A MINIMUM OF 2 PASSES.
8. DISTANCE BETWEEN SERVICE MAIN CONNECTIONS SHALL BE MINIMUM 18 INCHES
9. ON BAR WRAPPED CCP, ALL REINFORCING RE–BARS AFFECTED BY THE TAP SHALL BE RECONNECTED TO THE TAPPING SLEEVE BY WELDING TO RESTORE STRUCTURAL INTEGRITY OF PIPE. PIPE MORTAR AFFECTED BY THE TAP SHALL BE RESTORED.

WELDED STEEL MAINS

CEMENT MORTAR COATED (MAY BE POLYWRAPPED)

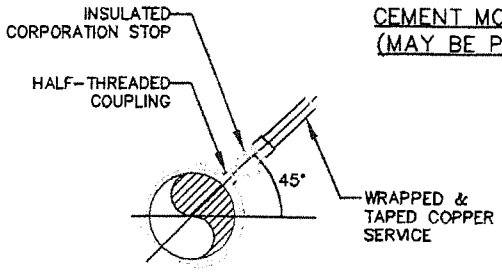

BITUMINOUS OR PLASTIC COATED

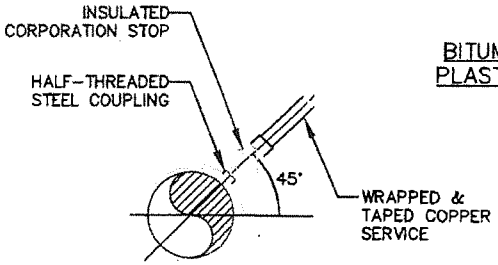

1" – 2" CONNECTIONS

SADDLE NOZZLE INSTALLATION UNDER PRESSURE (WET TAP)

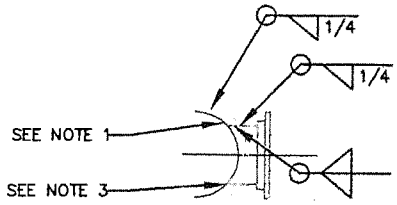

SADDLE NOZZLE

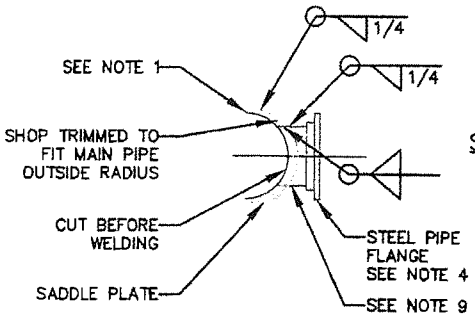

4" – 12" CONNECTIONS

MAIN CONNECTION DETAILS

APPROVED BY:

DATE : DEC 2014
REVISED : –

DWG. 31B

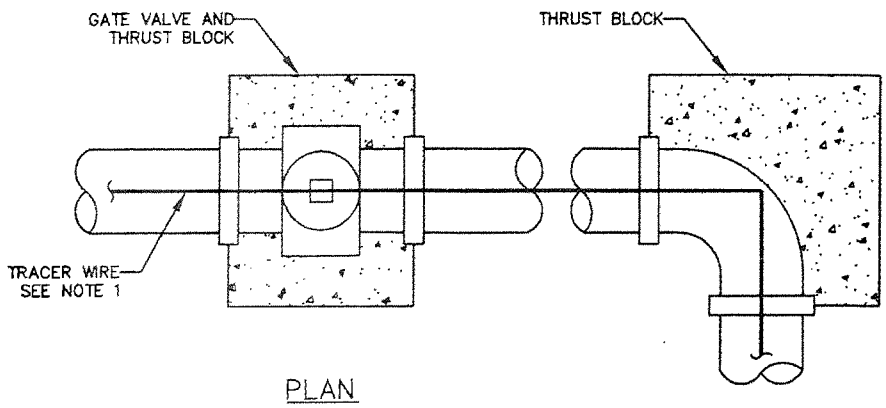

PLAN

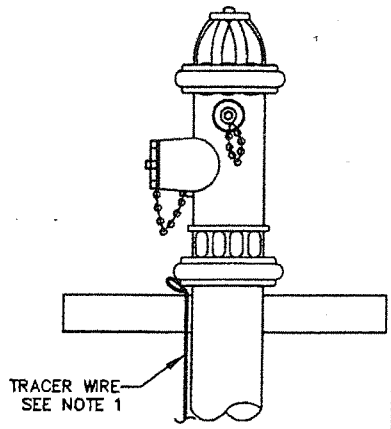

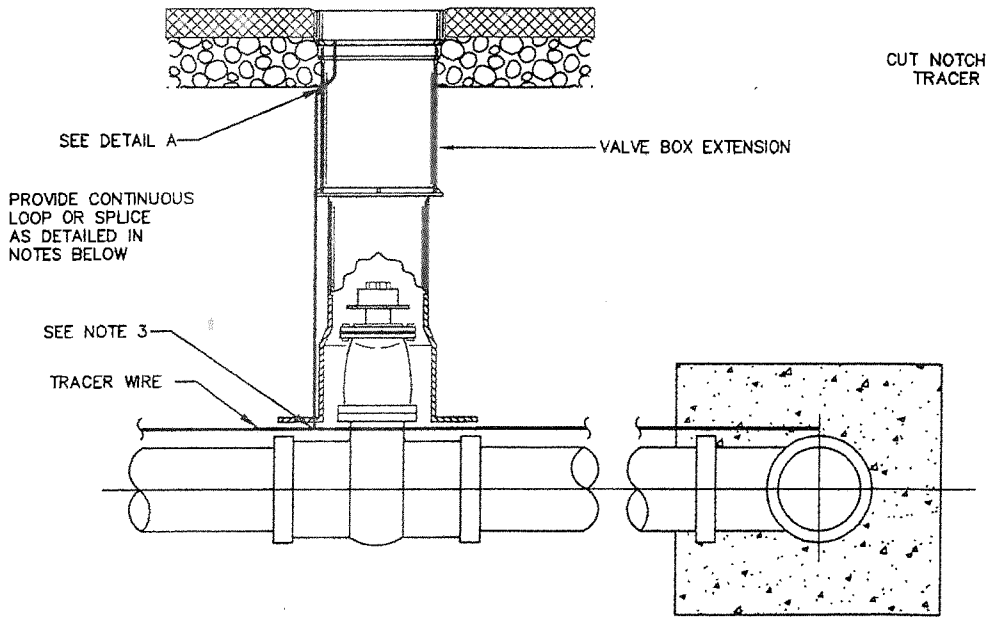

PROFILE

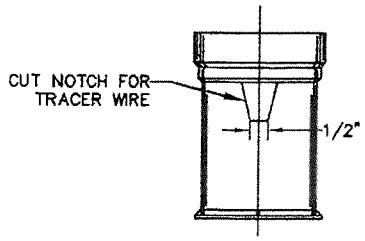

DETAIL A

NOTES:

1. CONTRACTOR SHALL USE CARE TO PREVENT DAMAGE TO TRACER WIRE WHEN PLACING CONCRETE.
2. ALL WIRE SHALL BE COPPER, TYPE THHN WIRE SIZE A.W.G. #10 BLUE INSULATED AND SUITABLE FOR DIRECT BURIAL.
3. SPLICES SHALL BE MADE WITH TWO COPPER OR BRASS SPLIT BOLT FASTENER WITHOUT ENCAPSULATION IN EPOXY.
4. TRACER WIRES SHALL BE INTER-CONNECTED AT PIPE TEES, CROSSES, AND VALVES.
5. CONTINUITY TESTS SHALL BE CONDUCTED TO THE SATISFACTION OF AND WITNESSED BY THE CITY ENGINEER.
6. TRACER WIRE IS REQUIRED ON ALL NON-METALLIC MAIN LINE PIPE AND HYDRANT RUNS.
7. FASTEN TRACER WIRE TO TOP OF PIPE WITH PLASTIC TAPE APPROXIMATELY EVERY 50 FEET.

TRACER WIRE INSTALLATION	APPROVED BY:	
	DATE : DEC 2014 REVISED : –	DWG. 32B

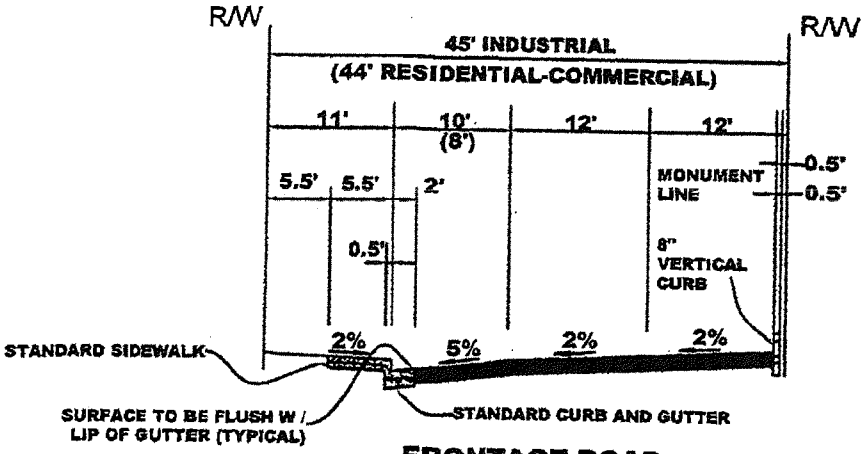

FRONTAGE ROAD

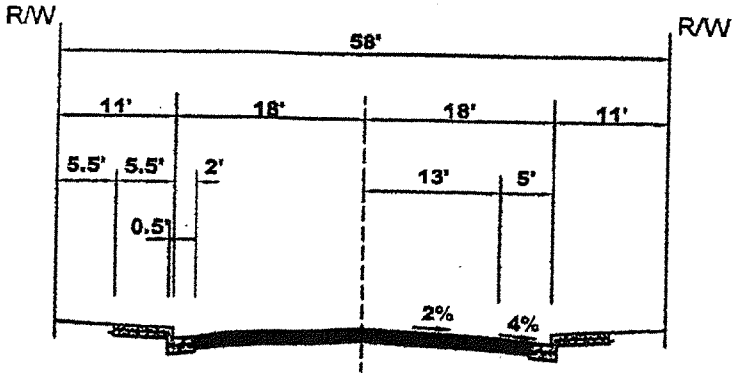

MINOR STREET - SINGLE FAMILY RESIDENTIAL

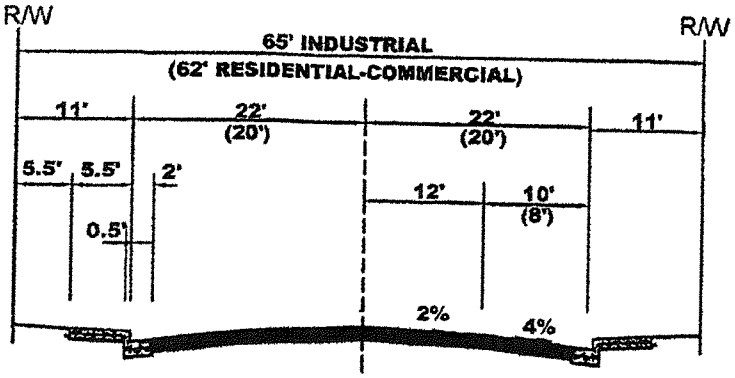

TWO LANE STREET

NOTE:

PAVEMENT SECTIONS TO BE MIN. 8" DEEP LIFT ASPHALTIC CONCRETE, UNLESS OTHERWISE SPECIFIED.

2006 STANDARD DETAILS

2 - LANE STREET SECTIONS	APPROVED BY:	
	DATE : JUNE 30, 2006 REVISED : NOV, 2006	DWG. 1C

4 & 6 LANES STREET SECTIONS

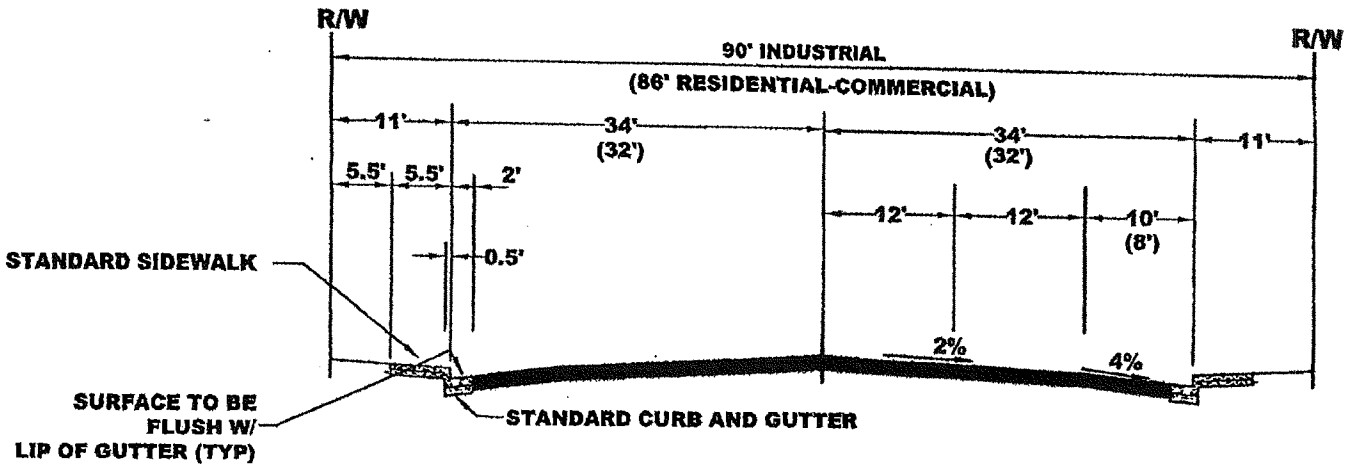

FOUR LANE STREET

NO SCALE

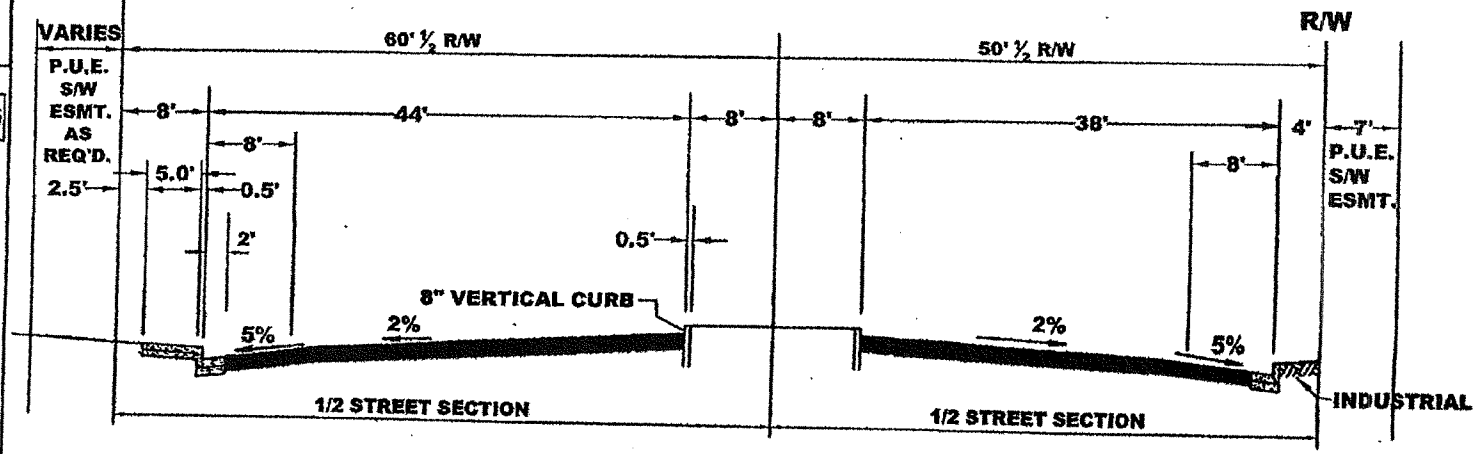

SIX LANE STREET

NO SCALE

NOTE:

1. PAVEMENT SECTIONS TO BE MIN. 6" DEEPLIFT ASPHALTIC CONCRETE, UNLESS OTHERWISE SPECIFIED. PAVEMENT DESIGN REQUIRED
2. SIDEWALK IN COMMERCIAL / INDUSTRIAL TO BE 10'

DATE : JUNE 30, 2006

DWG. 2C

APPROVED BY:

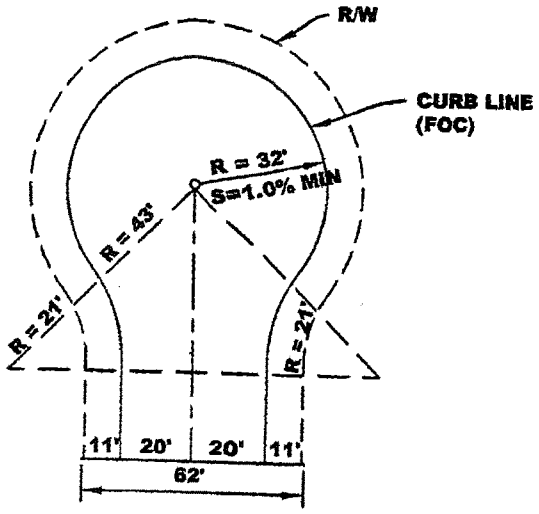

RESIDENTIAL
CURB RADIUS = 32'

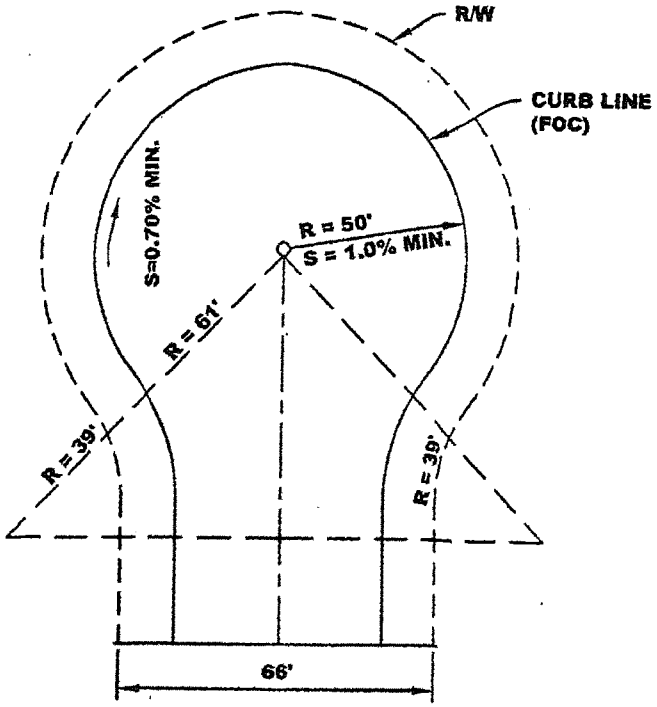

INDUSTRIAL
CURB RADIUS = 50'

CUL DE SAC DETAILS	APPROVED BY:	
	DATE : JUNE 30, 2006	DWG. 3C

2006 STANDARD DETAILS

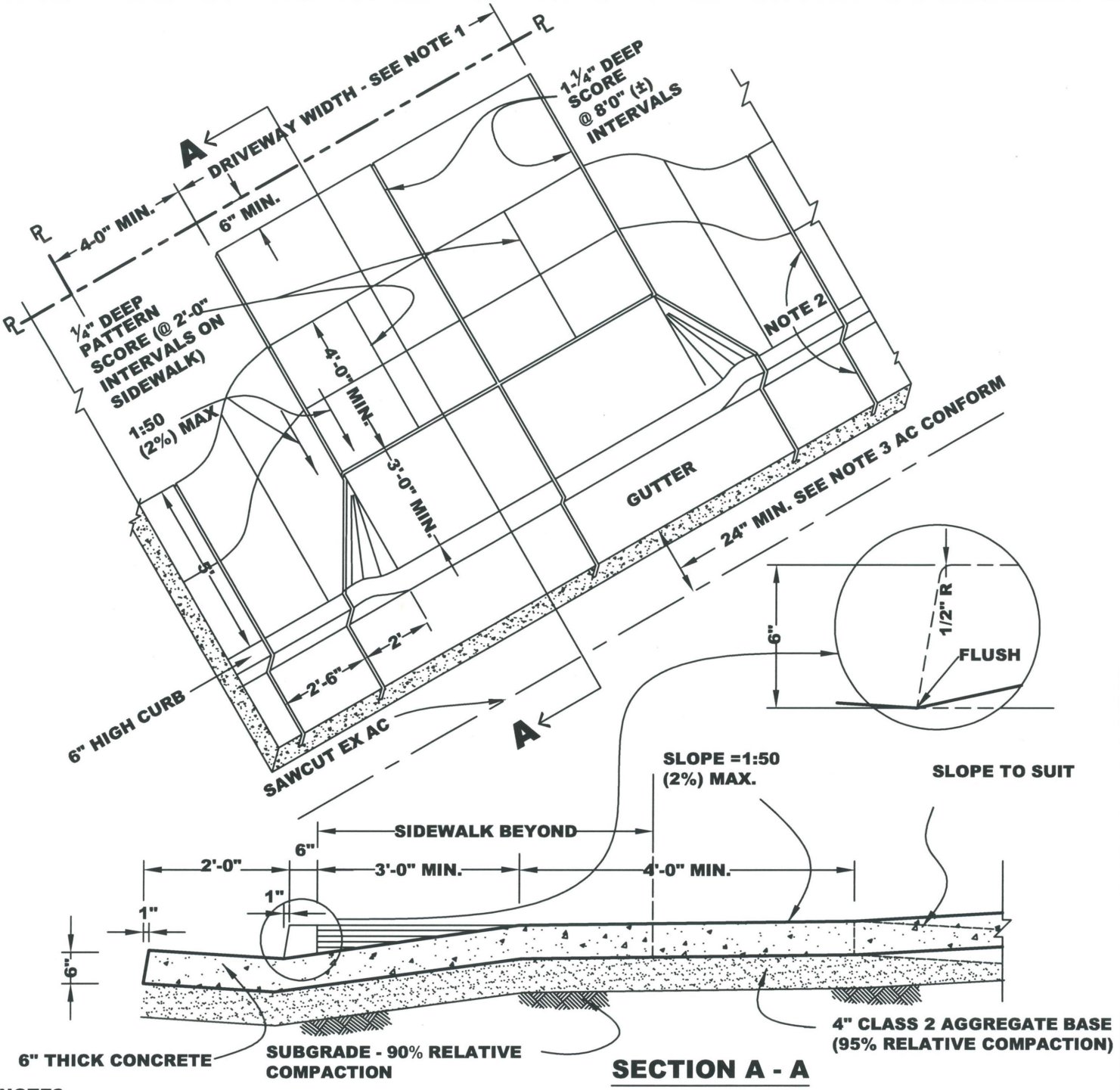

SECTION A - A

NOTES:

1. DRIVEWAY WIDTH. SINGLE 10'-0" MIN,16'0" MAX. DOUBLE 18'-0" MIN, 24'-0" MAX. WIDTH INCREMENTS SHALL BE IN MULTIPLES OF 2'-0". NOTE THAT FOR REQUIRED FIRE LANES, MINIMUM WIDTHS MAY BE GREATER.
2. IF CONSTRUCTING NEW DRIVEWAY IN EXISTING CURB, GUTTER & SIDEWALK, SAWCUT TO NEAREST SCORED JOINT OR CONTROL JOINT.
3. IF CONSTRUCTING NEW DRIVEWAY IN EXISTING CURB, GUTTER & SIDEWALK, SAWCUT AC & REMOVE. REPLACE WITH NEW AC AFTER CONSTRUCTION OF DRIVEWAY. AC THICKNESS = 6" MIN.; 12" MAX. ON ARTERIALS
4. LIGHT BROOM FINISH ALL SURFACES. USE 1PT LAMPBLACK PER CY
5. MATCH EXISTING SCORE PATTERNS OR EXISTING JOINTS IN SIDEWALK. SOME VARIATION IN DIMENSIONING IS PERMITTED, PROVIDED SPECIFIED MAX / MIN SLOPES/DIMENSIONS ARE NOT VIOLATED.
6. IF RIGHT - OF - WAY WIDTH IS INSUFFICIENT TO ALLOW THE USE OF THIS DETAIL, STANDARD DETAIL 5C - 2 MAY BE USED.
7. MINIMUM OF 4'-0" TO EDGE OF ADJACENT DRIVEWAY APPROACH.

RESIDENTIAL DRIVEWAY APPROACH IN MONOLITHIC CURB, GUTTER AND SIDEWALK	Sunnyvale	APPROVED BY:	
	DATE: JUNE 30, 2006 REVISED: MAY 2022	DWG.	5C-1

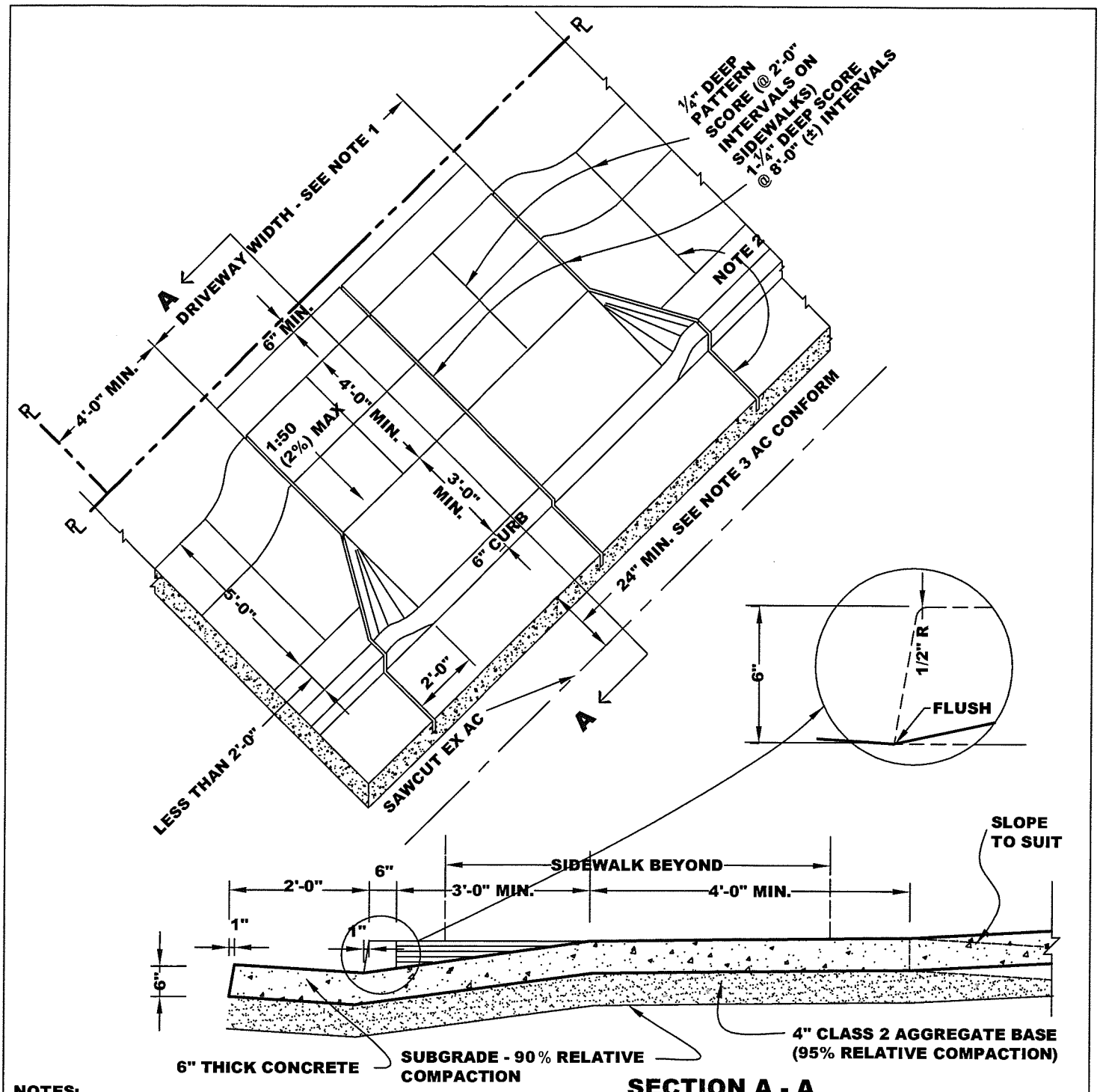

SECTION A - A

NOTES:

1. DRIVEWAY WIDTH. SINGLE 10'-0" MIN,16'-0" MAX. DOUBLE 18'-0" MIN, 24'-0" MAX. WIDTH INCREMENTS SHALL BE IN MULTIPLES OF 2'-0". NOTE THAT FOR REQUIRED FIRE LANES, MINIMUM WIDTHS MAY BE GREATER.
2. IF CONSTRUCTING NEW DRIVEWAY IN EXISTING CURB, GUTTER & SIDEWALK, SAWCUT TO NEAREST SCORED JOINT OR CONTROL JOINT.
3. IF CONSTRUCTING NEW DRIVEWAY IN EXISTING CURB, GUTTER & SIDEWALK, SAWCUT AC & REMOVE. REPLACE WITH NEW AC AFTER CONSTRUCTION OF DRIVEWAY. AC THICKNESS = 6" MIN.; 12" MAX. ON ARTERIALS
4. LIGHT BROOM FINISH ALL SURFACES. USE 1 1PT LAMPBLACK PER CY
5. MATCH EXISTING SCORE PATTERNS OR EXISTING JOINTS IN SIDEWALK. SOME VARIATION IN DIMENSIONING IS PERMITTED, PROVIDED SPECIFIED MAX / MIN SLOPES/DIMENSIONS ARE NOT VIOLATED.

RESIDENTIAL DRIVEWAY APPROACH IN NON MONOLITHIC CURB, GUTTER AND SIDEWALK,WITH PARK-STRIP LESS THAN 2'0" WIDE.	Sunnyvale	APPROVED BY:	
	DATE: JUNE 30, 2006 REVISED: SEPT 2018	DWG.	5C-3

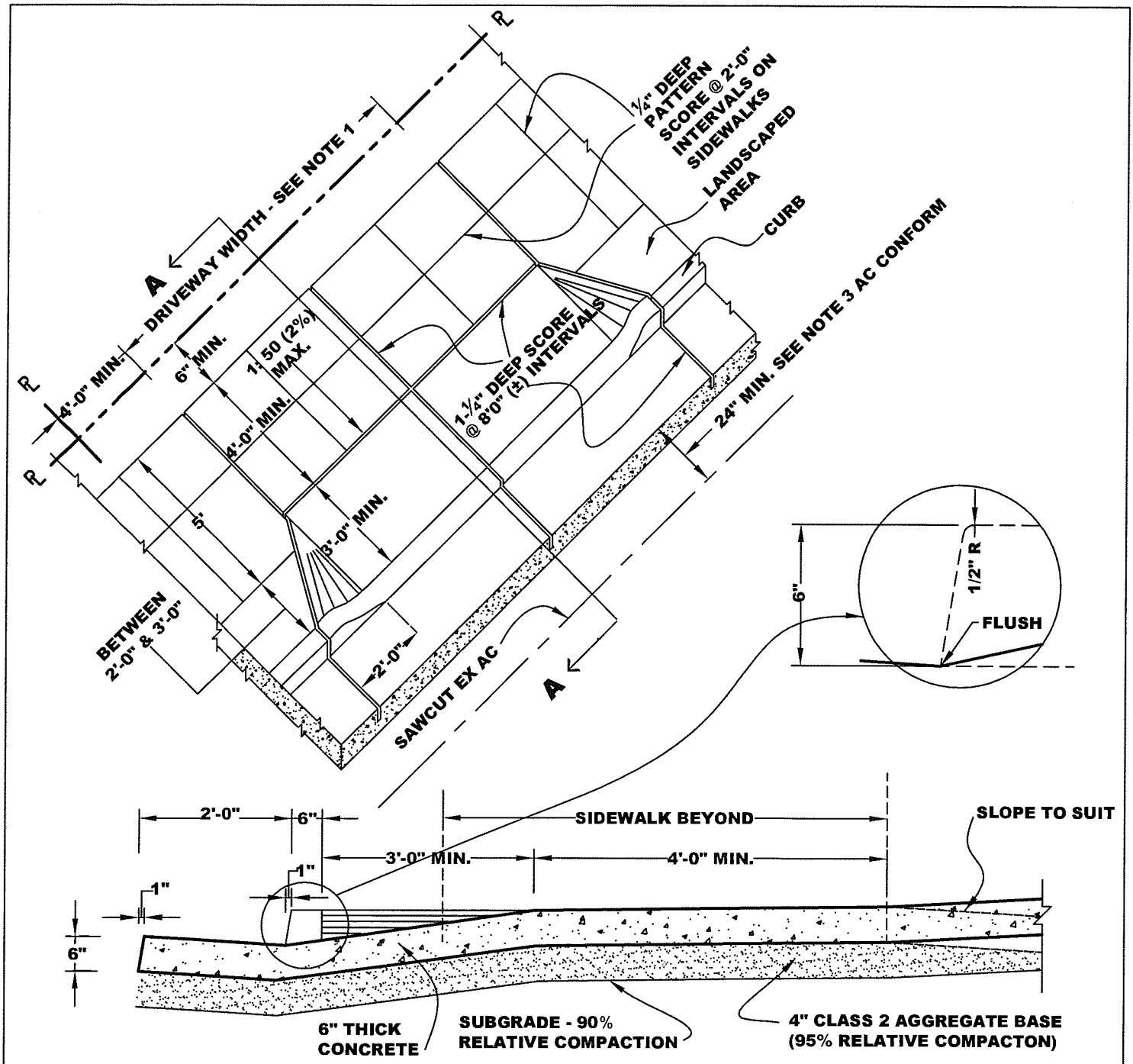

SECTION A - A

NOTES:

1. DRIVEWAY WIDTH. SINGLE 10'-0" MIN,16'-0" MAX. DOUBLE 18'-0" MIN, 24'-0" MAX. WIDTH INCREMENTS SHALL BE IN MULTIPLES OF 2'-0". NOTE THAT FOR REQUIRED FIRE LANES, MINIMUM WIDTHS MAY BE GREATER.
2. IF CONSTRUCTING NEW DRIVEWAY IN EXISTING CURB, GUTTER & SIDEWALK, SAWCUT TO NEAREST SCORED JOINT OR CONTROL JOINT.
3. IF CONSTRUCTING NEW DRIVEWAY IN EXISTING CURB, GUTTER & SIDEWALK, SAWCUT AC & REMOVE. REPLACE WITH NEW AC AFTER CONSTRUCTION OF DRIVEWAY. AC THICKNESS = 6"MIN.; 12"MAX. ON ARTERIALS.
4. LIGHT BROOM FINISH ALL SURFACES. USE 1PT LAMPBLACK PER CY
5. MATCH EXISTING SCORE PATTERNS OR EXISTING JOINTS IN SIDEWALK. SOME VARIATION IN DIMENSIONING IS PERMITTED, PROVIDED SPECIFIED MAX / MIN SLOPES/DIMENSIONS ARE NOT VIOLATED.

RESIDENTIAL DRIVEWAY APPROACH IN NON MONOLITHIC CURB, GUTTER AND SIDEWALK,WITH PARK-STRIP WIDTH GREATER THAN 2'-0" BUT LESS THAN 3'-0"	Sunnyvale	APPROVED BY:	
	DATE: JUNE 30, 2006 REVISED: SEPT 2018	DWG.	5C-4

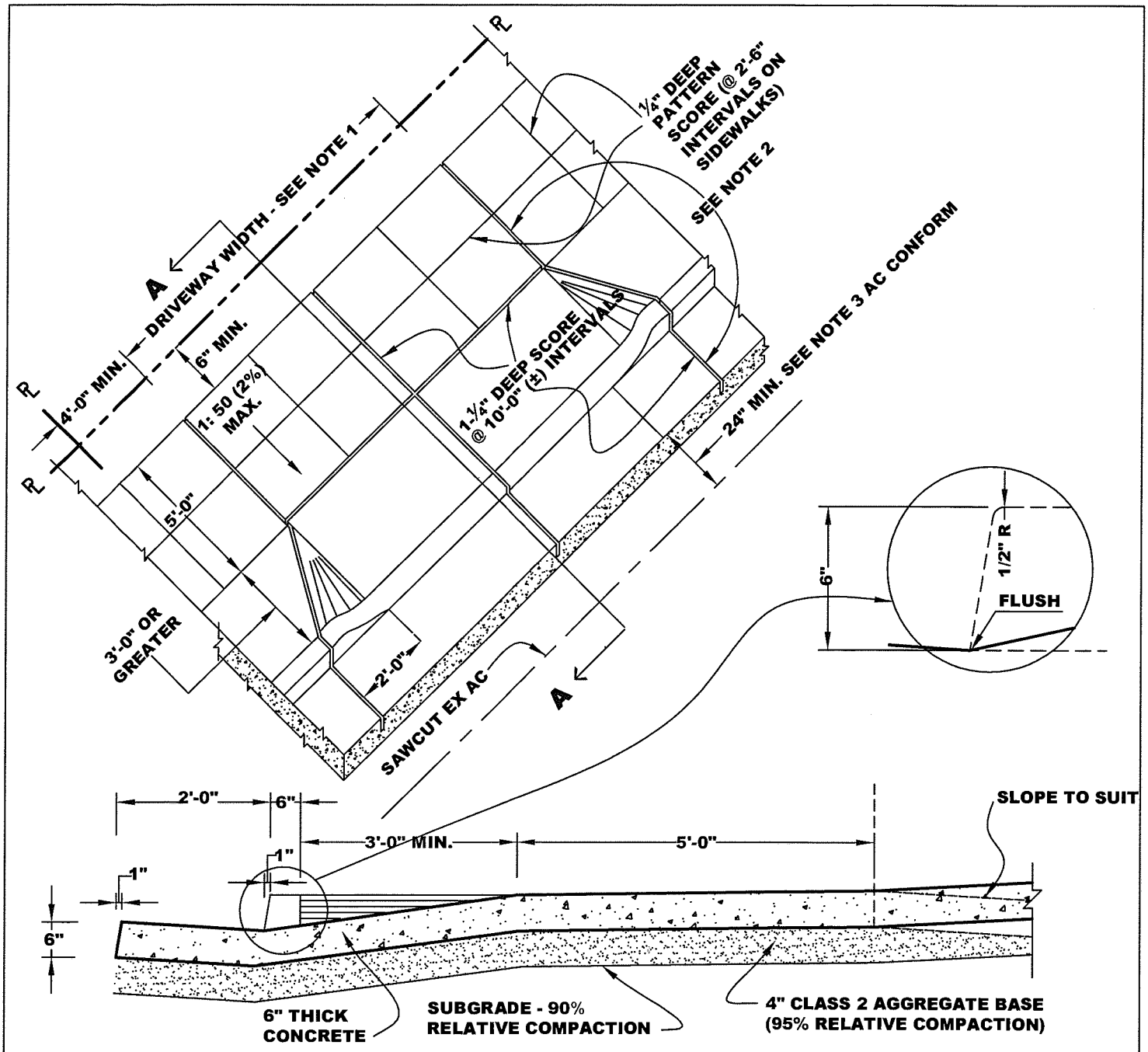

SECTION A - A

NOTES:

1. DRIVEWAY WIDTH. SINGLE 10'-0" MIN,15'-0" MAX. DOUBLE 17'-6" MIN, 25'-0" MAX. WIDTH INCREMENTS SHALL BE IN MULTIPLES OF 2'-6". NOTE THAT FOR REQUIRED FIRE LANES, MINIMUM WIDTHS MAY BE GREATER.
2. IF CONSTRUCTING NEW DRIVEWAY IN EXISTING CURB, GUTTER & SIDEWALK, SAWCUT TO NEAREST SCORED JOINT OR CONTROL JOINT.
3. IF CONSTRUCTING NEW DRIVEWAY IN EXISTING CURB, GUTTER & SIDEWALK, SAWCUT AC & REMOVE. REPLACE WITH NEW AC AFTER CONSTRUCTION OF DRIVEWAY. AC THICKNESS = 6" MIN.; 12" MAX. ON ARTERIALS.
4. LIGHT BROOM FINISH ALL SURFACES. USE 1PT LAMPBLACK PER CY
5. MATCH EXISTING SCORE PATTERNS OR EXISTING JOINTS IN SIDEWALK. SOME VARIATION IN DIMENSIONING IS PERMITTED, PROVIDED SPECIFIED MAX / MIN SLOPES/DIMENSIONS ARE NOT VIOLATED.

RESIDENTIAL DRIVEWAY APPROACH IN NON MONOLITHIC CURB, GUTTER AND SIDEWALK,WITH PARK-STRIP GREATER THAN 3'-0" WIDE	Sunnyvale APPROVED BY:	
	DATE: JUNE 30, 2006 REVISED: SEPT 2018	DWG. 5C-5

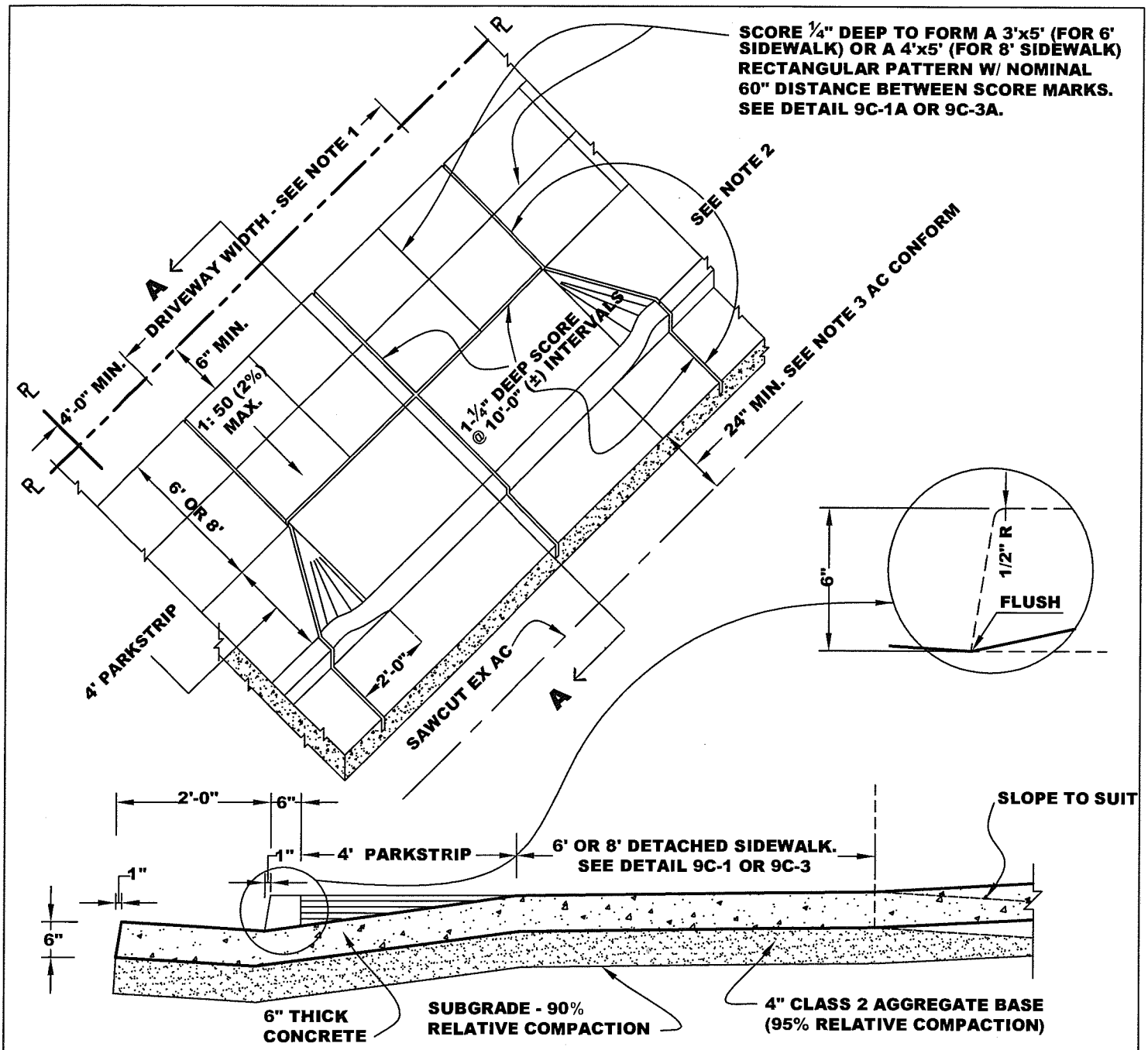

SECTION A - A

NOTES:

1. DRIVEWAY APPROACH WIDTH 10'-0" MIN. AND 25'-0" MAX. NOTE THAT FOR DRIVEWAY APPROACH TO BE USED BY EMERGENCY VEHICLE(S), THE WIDTH IS 20'-0" MIN. AND MAX. MAY BE GREATER THAN 25'-0".
2. IF CONSTRUCTING NEW DRIVEWAY APPROACH IN EXISTING CURB, GUTTER & SIDEWALK, SAWCUT TO NEAREST SCORED JOINT OR CONTROL JOINT.
3. IF CONSTRUCTING NEW DRIVEWAY APPROACH IN EXISTING CURB, GUTTER & SIDEWALK, SAWCUT AC & REMOVE. REPLACE WITH NEW AC AFTER CONSTRUCTION. AC THICKNESS = 6" MIN.; 12" MAX. ON ARTERIALS.
4. LIGHT BROOM FINISH ALL SURFACES. USE 1PT LAMPBLACK PER CUBIC YARD.
5. MATCH EXISTING SCORE PATTERNS OR EXISTING JOINTS IN SIDEWALK. SOME VARIATION IN DIMENSIONING IS PERMITTED, PROVIDED SPECIFIED MAX / MIN SLOPES/DIMENSIONS ARE NOT VIOLATED.

RESIDENTIAL DRIVEWAY APPROACH IN DETACHED 6' OR 8' SIDEWALK WITH 4' PARK-STRIP	Sunnyvale APPROVED BY:	
	DATE: JULY 2015 REVISED: SEPT 2018	DWG. 5C-6

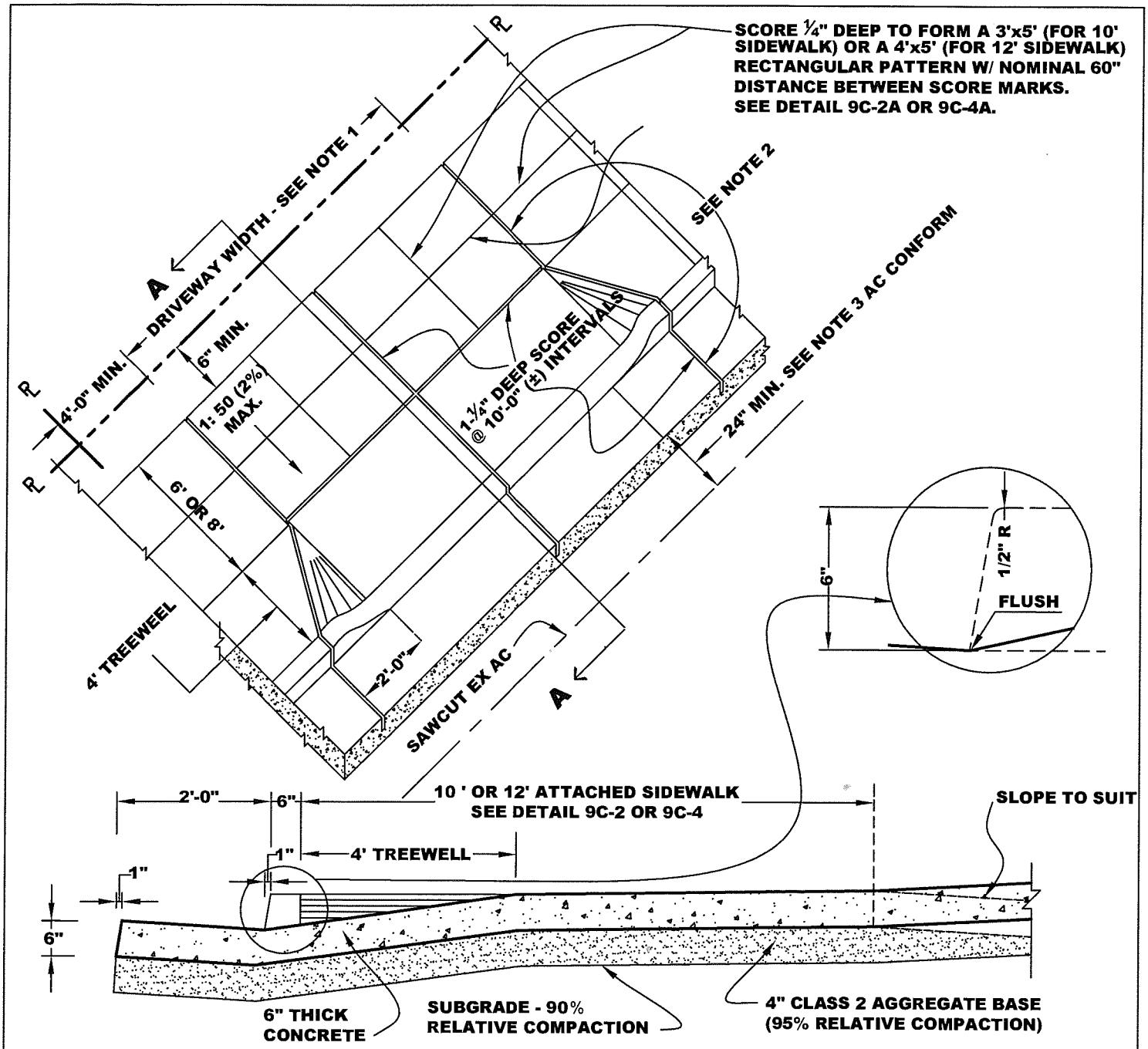

SECTION A - A

NOTES:

1. DRIVEWAY APPROACH WIDTH 10'-0" MIN AND 25'-0" MAX. NOTE THAT FOR DRIVEWAY APPROACH TO BE USED BY EMERGENCY VEHICLE(S), THE WIDTH IS 20'-0" MIN. AND MAX. MAY BE GREATER THAN 25'-0".
2. IF CONSTRUCTING NEW DRIVEWAY APPROACH IN EXISTING CURB, GUTTER & SIDEWALK, SAWCUT TO NEAREST SCORED JOINT OR CONTROL JOINT.
3. IF CONSTRUCTING NEW DRIVEWAY APPROACH IN EXISTING CURB, GUTTER & SIDEWALK, SAWCUT AC & REMOVE. REPLACE WITH NEW AC AFTER CONSTRUCTION. AC THICKNESS = 6" MIN.; 12" MAX. ON ARTERIALS.
4. LIGHT BROOM FINISH ALL SURFACES. USE 1PT LAMPBLACK PER CUBIC YARD.
5. MATCH EXISTING SCORE PATTERNS OR EXISTING JOINTS IN SIDEWALK. SOME VARIATION IN DIMENSIONING IS PERMITTED, PROVIDED SPECIFIED MAX / MIN SLOPES/DIMENSIONS ARE NOT VIOLATED.

RESIDENTIAL DRIVEWAY APPROACH IN ATTACHED 10' OR 12' SIDEWALK WITH 4'x5' TREEWELL	Sunnyvale	APPROVED BY:
	DATE: JULY 2015 REVISED: SEPT 2018	DWG. 5C-7

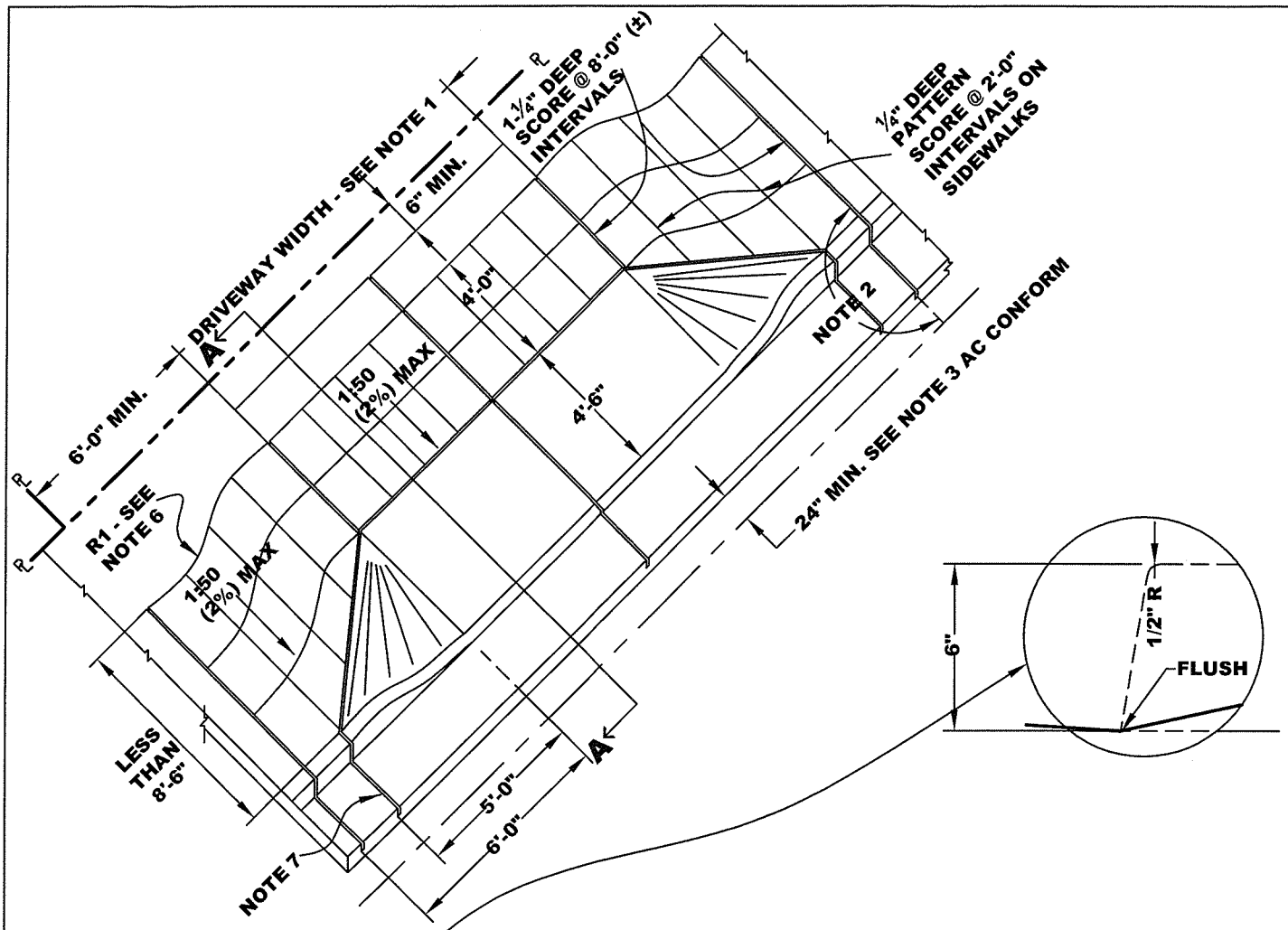

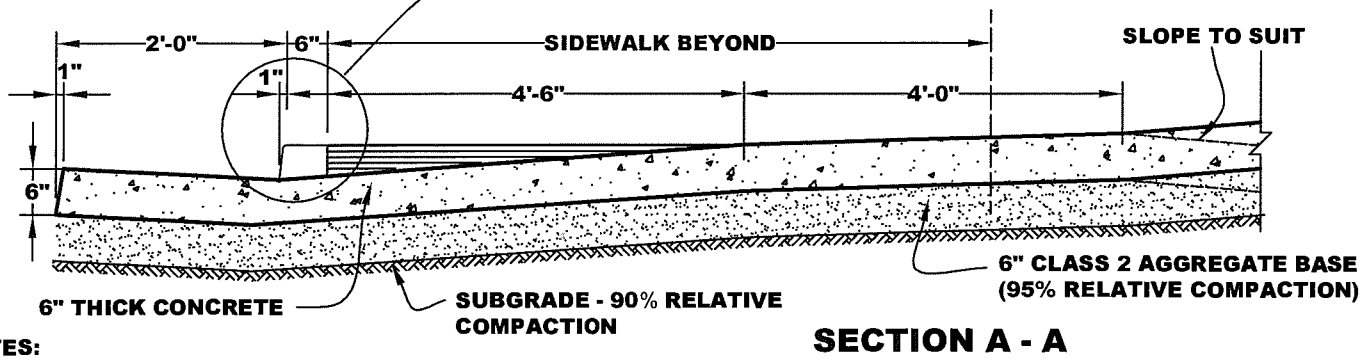

SECTION A - A

NOTES:

1. DRIVEWAY WIDTH. SINGLE 12'-0" MIN,18'-0" MAX. DOUBLE 20'-0" MIN, 42'-0" MAX. WIDTH INCREMENTS SHALL BE IN MULTIPLES OF 2'-0". NOTE THAT FOR REQUIRED FIRE LANES, MINIMUM WIDTHS MAY BE GREATER.
2. IF CONSTRUCTING NEW DRIVEWAY IN EXISTING CURB, GUTTER & SIDEWALK, SAWCUT TO NEAREST SCORED JOINT OR CONTROL JOINT.
3. IF CONSTRUCTING NEW DRIVEWAY IN EXISTING CURB, GUTTER & SIDEWALK, SAWCUT AC & REMOVE. REPLACE WITH NEW AC AFTER CONSTRUCTION OF DRIVEWAY. AC THICKNESS = 6" MIN.; 12" MAX. ON ARTERIALS.
4. LIGHT BROOM FINISH ALL SURFACES. USE 1 PT LAMPBLACK PER CY
5. MATCH EXISTING SCORE PATTERNS OR EXISTING JOINTS IN SIDEWALK. SOME VARIATION IN DIMENSIONING IS PERMITTED, PROVIDED SPECIFIED MAX / MIN SLOPES/DIMENSIONS ARE NOT VIOLATED.
6. R1 IS A FUNCTION OF EXISTING SIDEWALK WIDTH. SELECT TO CREATE SMOOTH TRANSITION.
7. MIN. OF 4'-0" TO EDGE OF FLARE OF ADJACENT DRIVEWAY APPROACH.

COMMERCIAL AND INDUSTRIAL DRIVEWAY APPROACH IN MONOLITHIC CURB, GUTTER AND SIDEWALK, LESS THAN 8'-6" WIDE	Sunnyvale APPROVED BY:	
	DATE: JUNE 30, 2006 REVISED: SEPT 2018	DWG. 6C-1

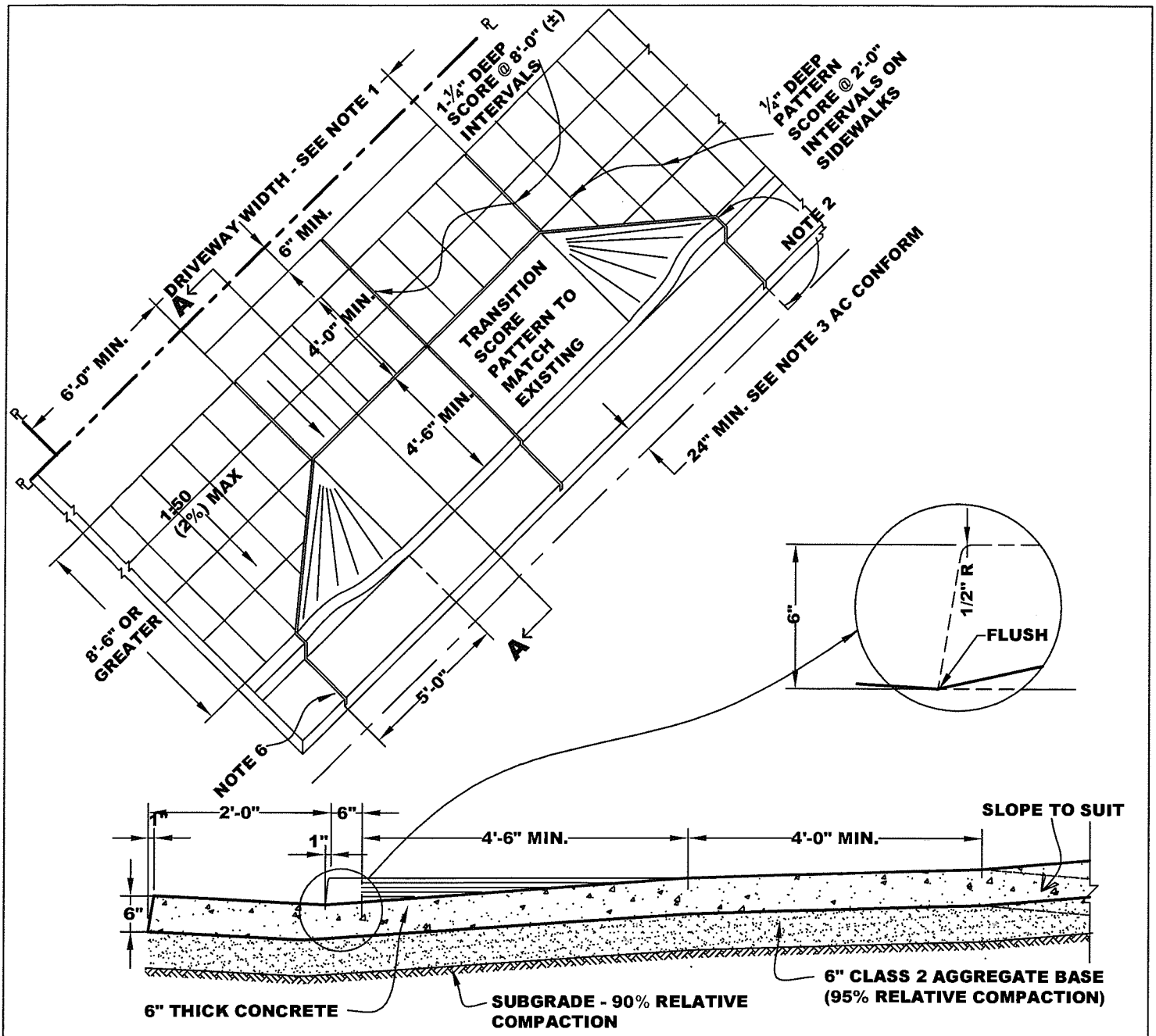

SECTION A - A

NOTES:

1. DRIVEWAY WIDTH. SINGLE 12'-0" MIN,18'-0" MAX. DOUBLE 20'-0" MIN, 42'-0" MAX. WIDTH INCREMENTS SHALL BE IN MULTIPLES OF 2'-0". NOTE THAT FOR REQUIRED FIRE LANES, MINIMUM WIDTHS MAY BE GREATER.
2. IF CONSTRUCTING NEW DRIVEWAY IN EXISTING CURB, GUTTER & SIDEWALK, SAWCUT TO NEAREST SCORED JOINT OR CONTROL JOINT.
3. IF CONSTRUCTING NEW DRIVEWAY IN EXISTING CURB, GUTTER & SIDEWALK,SAWCUT AC & REMOVE. REPLACE WITH NEW AC AFTER CONSTRUCTION OF DRIVEWAY. AC THICKNESS = 6" MIN.; 12" MAX. ON ARTERIALS
4. LIGHT BROOM FINISH ALL SURFACES. USE 1 PT LAMPBLACK PER CY
5. MATCH EXISTING SCORE PATTERNS OR EXISTING JOINTS IN SIDEWALK. SOME VARIATION IN DIMENSIONING IS PERMITTED, PROVIDED SPECIFIED MAX / MIN SLOPES/DIMENSIONS ARE NOT VIOLATED.
6. MIN. OF 4'-0" TO EDGE OF FLARE OF ADJACENT DRIVEWAY APPROACH.

COMMERCIAL AND INDUSTRIAL DRIVEWAY APPROACH IN MONOLITHIC CURB, GUTTER AND SIDEWALK, GREATER THAN 8'-6" WIDE.	Sunnyvale	APPROVED BY:	
	DATE: JUNE 30, 2006 REVISED: SEPT 2018	DWG.	6C-2

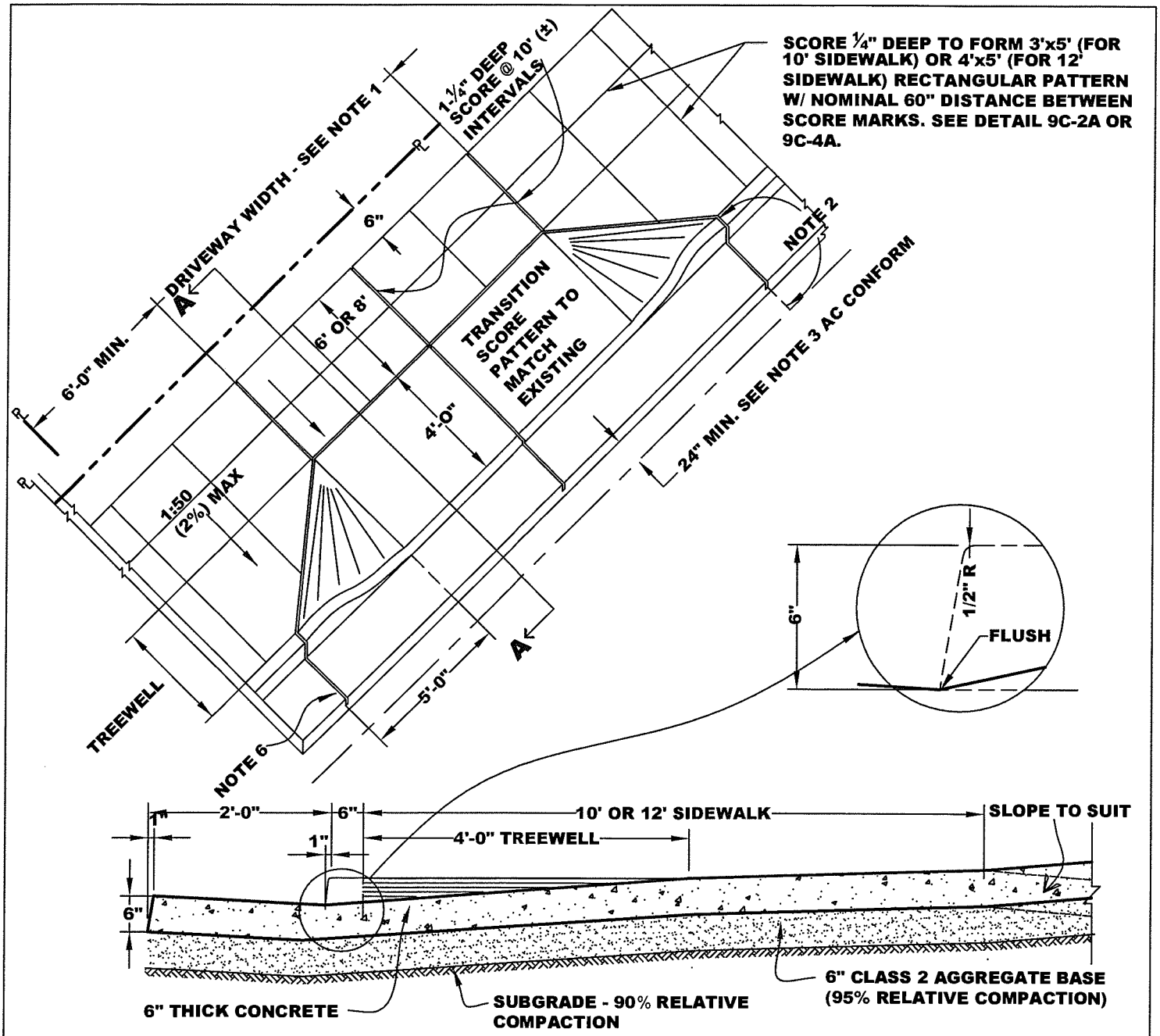

SECTION A - A

NOTES:

1. DRIVEWAY APPROACH WIDTH 12'-0" MIN AND 42'-0" MAX. NOTE THAT FOR DRIVEWAY APPROACH TO BE USED BY EMERGENCY VEHICLE(S), THE WIDTH IS 20'-0" IS MIN.
2. IF CONSTRUCTING NEW DRIVEWAY APPROACH IN EXISTING CURB, GUTTER & SIDEWALK, SAWCUT TO NEAREST SCORED JOINT OR CONTROL JOINT.
3. IF CONSTRUCTING NEW DRIVEWAY APPROACH IN EXISTING CURB, GUTTER & SIDEWALK,SAWCUT AC & REMOVE. REPLACE ITH NEW AC AFTER CONSTRUCTION. AC THICKNESS = 6" MIN.; 12" MAX. ON ARTERIALS
4. LIGHT BROOM FINISH ALL SURFACES. USE 1 PT LAMPBLACK PER CUBIC YARD.
5. MATCH EXISTING SCORE PATTERNS OR EXISTING JOINTS IN SIDEWALK. SOME VARIATION IN DIMENSIONING IS PERMITTED, PROVIDED SPECIFIED MAX / MIN SLOPES/DIMENSIONS ARE NOT VIOLATED.
6. MIN. OF 4'-0" TO EDGE OF FLARE OF ADJACENT DRIVEWAY APPROACH.

COMMERCIAL AND INDUSTRIAL DRIVEWAY APPROACH IN ATTACHED 10' OR 12' SIDEWALK WITH 4'x5' TREEWELL	Sunnyvale APPROVED BY:	
	DATE: JULY 2015 REVISED: SEPT 2018	DWG. 6C-4

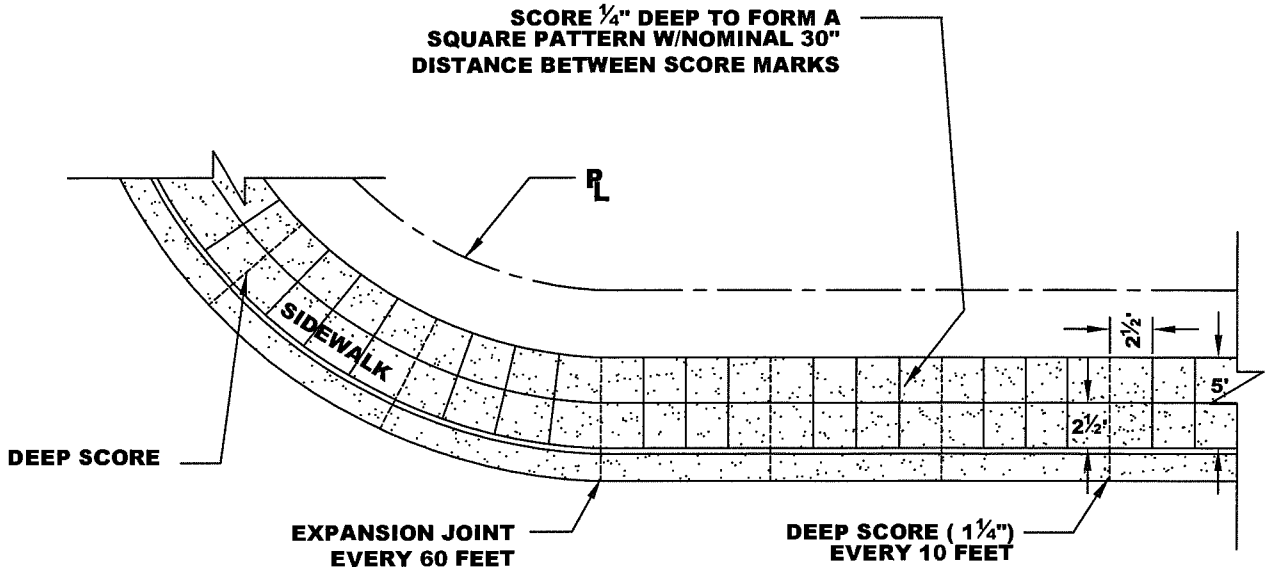

PLAN VIEW
NO SCALE

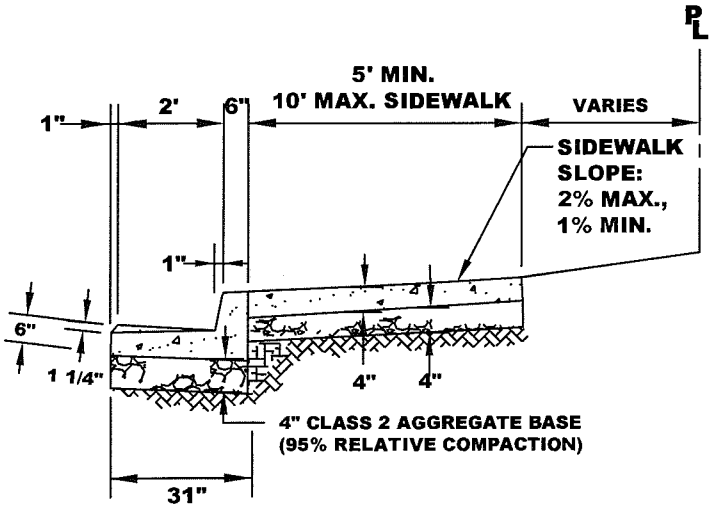

NON-MONOLITHIC SECTION
(FOR NEW CONSTRUCTIONS)

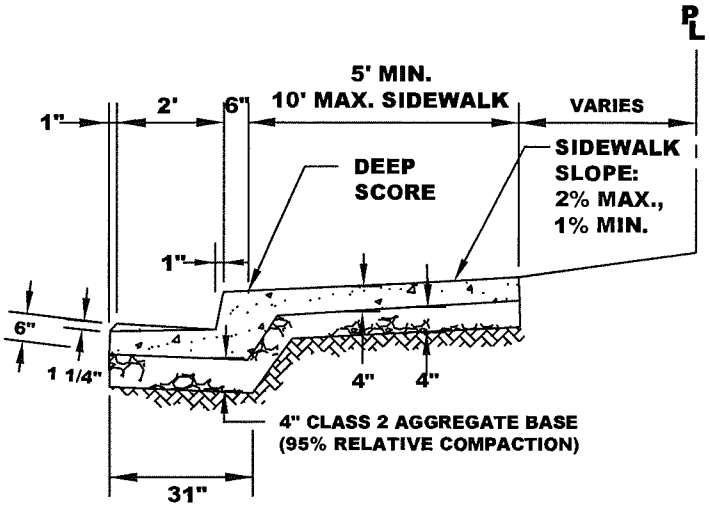

MONOLITHIC SECTION
(ACCEPTABLE SUBJECT TO CITY'S APPROVAL)

NOTE: SEE STANDARD DETAILS 13F & 14F FOR INSTALLATION OF ROOT BARRIER, IF CITY DETERNINES ROOT BARRIER IS NECESSARY.

WHEN REPLACING EXISTING CURB W/ NEW, REPLACE PRE-EXISTING CURB MARKS & PAINT (ESPECIALLY THOSE MARKS IDENTIFYING SEWER OR VALVE FEATURES).
USE 1 PINT LAMPBLACK PER CUBIC YARD OF CONCRETE

FOR NEW CURB AND GUTTER INSTALLATION, SAWCUT 24" MINIMUM AC FROM LIP OF GUTTER AND REMOVE. REPLACE WITH NEW AC DEEP LIFT IN 3" LAYERS TO A TOTAL MIN. DEPTH OF 6" OR TO EXIST. THICKNESS PLUS AN ADDITIONAL 1", WHICHEVER IS GREATER.

CURB, GUTTER & SIDEWALK SECTION	Sunnyvale	APPROVED BY:
	DATE : JUNE 30, 2006 REVISED : SEPT 2018	DWG. 9C

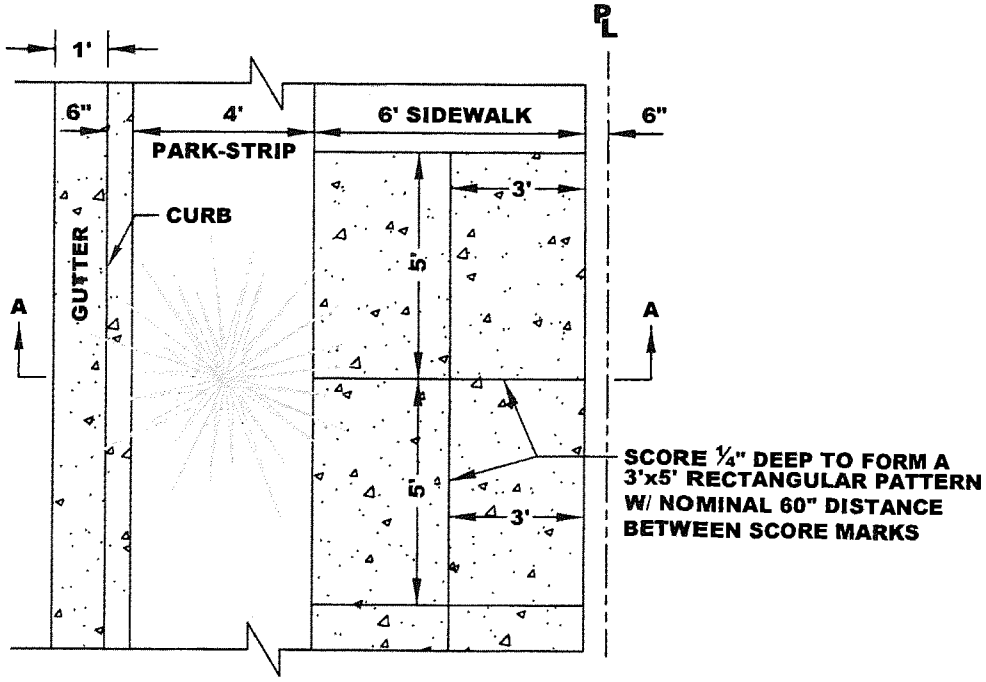

PLAN VIEW
NO SCALE

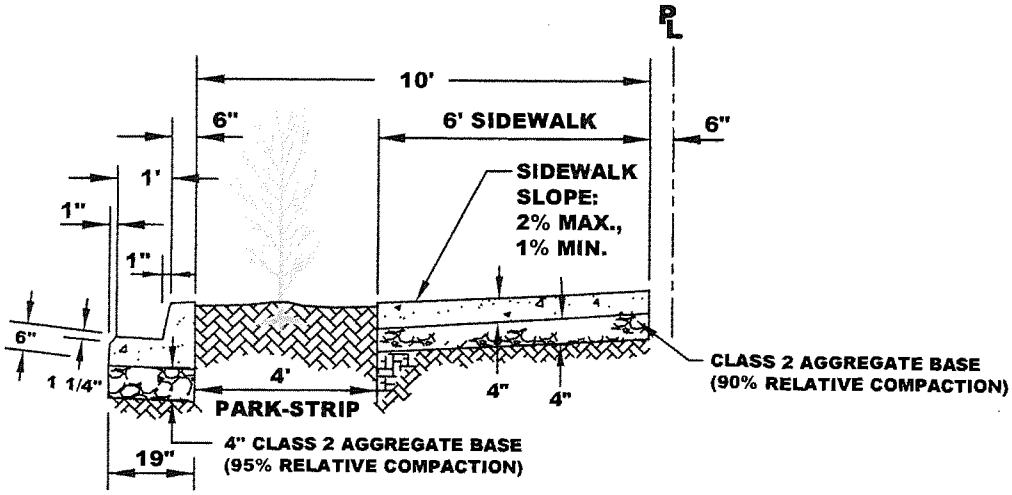

SECTION AA
NO SCALE

NOTE: SEE STANDARD DETAILS 13F & 14F FOR INSTALLATION OF ROOT BARRIER, IF CITY DETERMINES ROOT BARRIER IS NECESSARY.

WHEN REPLACING EXISTING CURB W/ NEW, REPLACE PRE-EXISTING CURB MARKS & PAINT (ESPECIALLY THOSE MARKS IDENTIFYING SEWER OR VALVE FEATURES).
USE 1 PINT LAMPBLACK PER CUBIC YARD OF CONCRETE

EXPANSION JOINT AT EVERY 60 FEET AND DEEP SCORE (1 ¼") AT EVERY 10 FEET

FOR NEW CURB AND GUTTER INSTALLATION, SAWCUT 12" AC FROM LIP OF GUTTER AND REMOVE. REPLACE WITH NEW AC DEEP LIFT IN 3" LAYERS TO A TOTAL MIN. DEPTH OF 6" OR TO EXIST. THICKNESS PLUS AN ADDITIONAL 1", WHICHEVER IS GREATER.

DETACHED 6-FOOT SIDEWALK WITH 4-FOOT PARK-STRIP	APPROVED BY:	
	DATE : SEPT, 2013 REVISED :	DWG. 9C-1

2013 STANDARD DETAILS

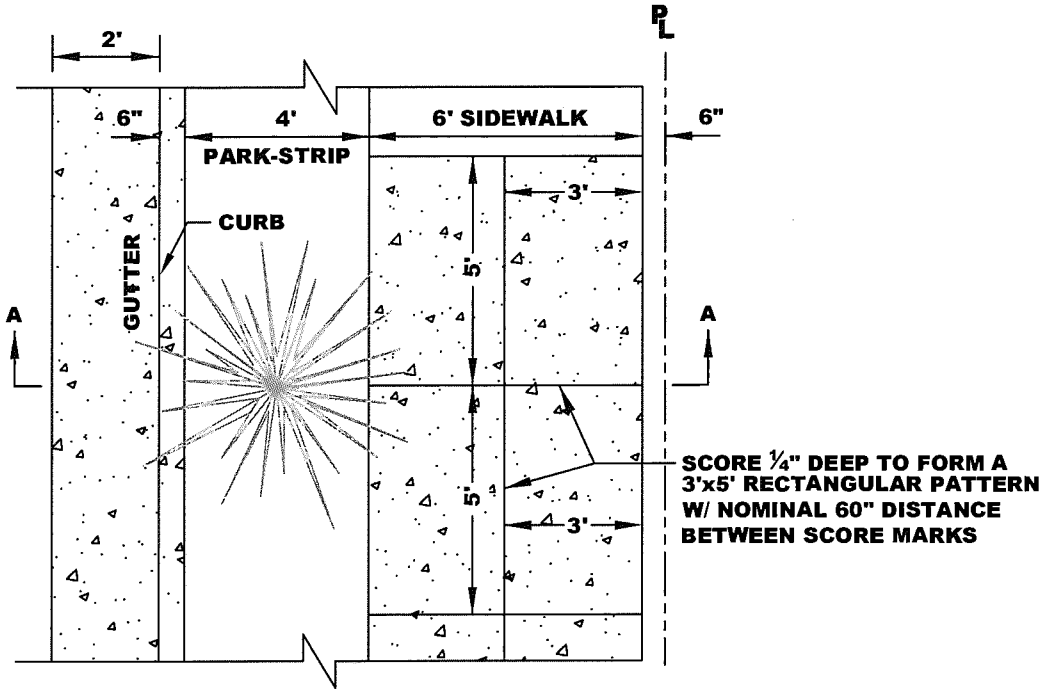

PLAN VIEW
NO SCALE

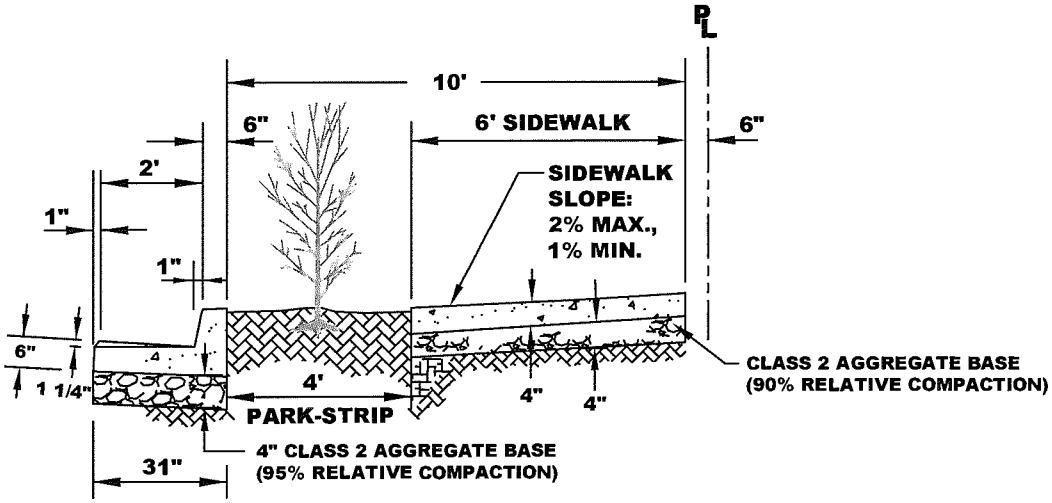

SECTION AA
NO SCALE

NOTE: SEE STANDARD DETAILS 13F & 14F FOR INSTALLATION OF ROOT BARRIER, IF CITY DETERMINES ROOT BARRIER IS NECESSARY.

WHEN REPLACING EXISTING CURB W/ NEW, REPLACE PRE-EXISTING CURB MARKS & PAINT (ESPECIALLY THOSE MARKS IDENTIFYING SEWER OR VALVE FEATURES).
USE 1 PINT LAMPBLACK PER CUBIC YARD OF CONCRETE

EXPANSION JOINT AT EVERY 60 FEET AND DEEP SCORE (1 ¼") AT EVERY 10 FEET

FOR NEW CURB AND GUTTER INSTALLATION, SAWCUT 24" MINIMUM AC FROM LIP OF GUTTER AND REMOVE. REPLACE WITH NEW AC DEEP LIFT IN 3" LAYERS TO A TOTAL MIN. DEPTH OF 6" OR TO EXIST. THICKNESS PLUS AN ADDITIONAL 1", WHICHEVER IS GREATER.

DETACHED 6-FOOT SIDEWALK WITH 4-FOOT PARK-STRIP	Sunnyvale APPROVED BY:	
	DATE : SEPT 2013 REVISED : SEPT 2018	DWG. 9C-1A

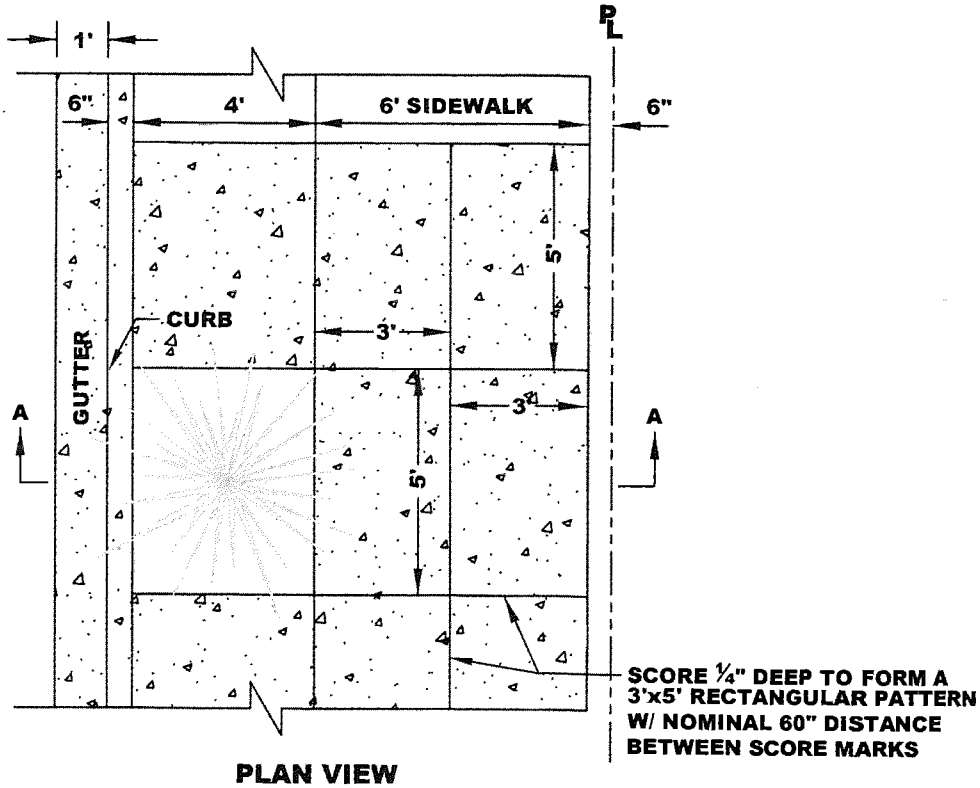

PLAN VIEW
NO SCALE

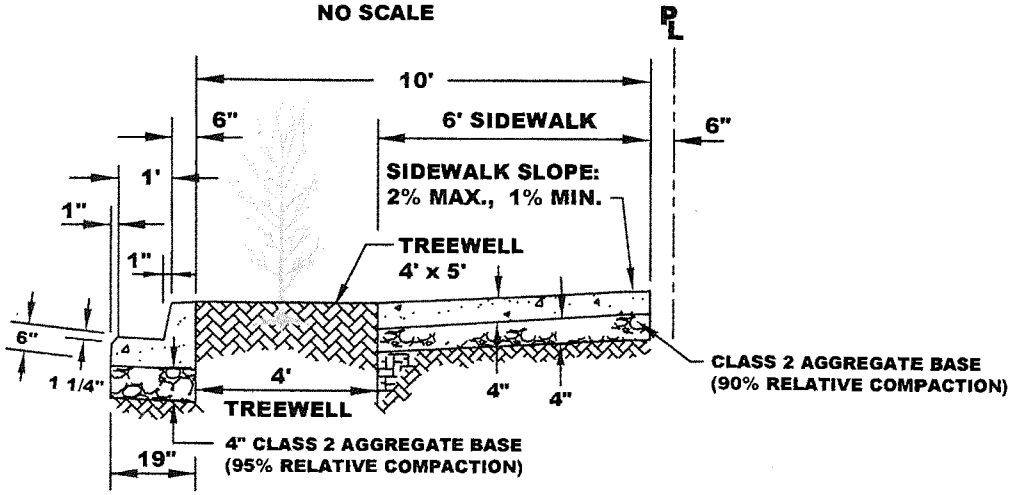

SECTION AA
NO SCALE

NOTE: SEE STANDARD DETAILS 13F & 14F FOR INSTALLATION OF ROOT BARRIER, IF CITY DETERMINES ROOT BARRIER IS NECESSARY.

WHEN REPLACING EXISTING CURB W/ NEW, REPLACE PRE-EXISTING CURB MARKS & PAINT (ESPECIALLY THOSE MARKS IDENTIFYING SEWER OR VALVE FEATURES).
USE 1 PINT LAMPBLACK PER CUBIC YARD OF CONCRETE

EXPANSION JOINT AT EVERY 60 FEET AND DEEP SCORE (1 ¼") AT EVERY 10 FEET

FOR NEW CURB AND GUTTER INSTALLATION, SAWCUT 12" AC FROM LIP OF GUTTER AND REMOVE. REPLACE WITH NEW AC DEEP LIFT IN 3" LAYERS TO A TOTAL MIN. DEPTH OF 6" OR TO EXIST. THICKNESS PLUS AN ADDITIONAL 1", WHICHEVER IS GREATER.

ATTACHED 10-FOOT SIDEWALK WITH 4'x5' TREEWELL	APPROVED BY:	
	DATE : SEPT, 2013 REVISED :	DWG. 9C-2

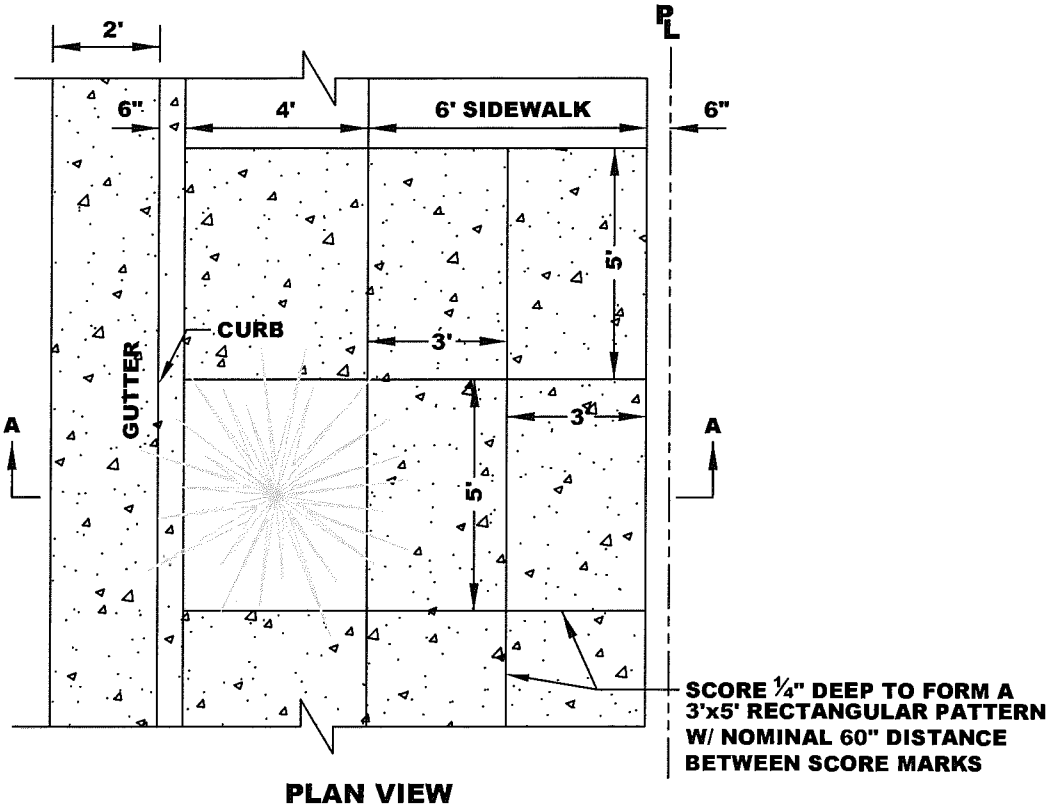

PLAN VIEW
NO SCALE

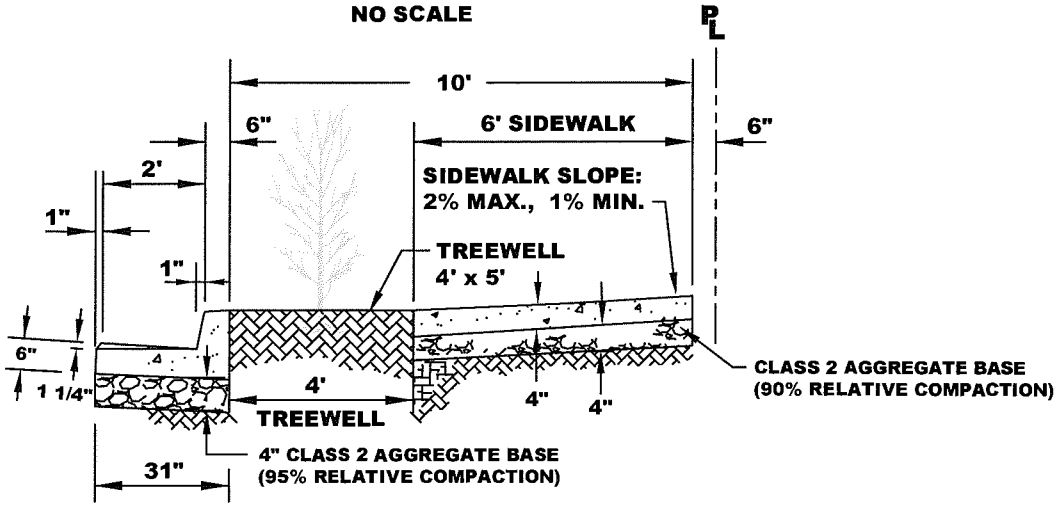

SECTION AA
NO SCALE

NOTE: SEE STANDARD DETAILS 13F & 14F FOR INSTALLATION OF ROOT BARRIER, IF CITY DETERMINES ROOT BARRIER IS NECESSARY.

WHEN REPLACING EXISTING CURB W/ NEW, REPLACE PRE-EXISTING CURB MARKS & PAINT (ESPECIALLY THOSE MARKS IDENTIFYING SEWER OR VALVE FEATURES).
USE 1 PINT LAMPBLACK PER CUBIC YARD OF CONCRETE

EXPANSION JOINT AT EVERY 60 FEET AND DEEP SCORE (1 ¼") AT EVERY 10 FEET

FOR NEW CURB AND GUTTER INSTALLATION, SAWCUT 24" MINIMUM AC FROM LIP OF GUTTER AND REMOVE. REPLACE WITH NEW AC DEEP LIFT IN 3" LAYERS TO A TOTAL MIN. DEPTH OF 6" OR TO EXIST. THICKNESS PLUS AN ADDITIONAL 1", WHICHEVER IS GREATER.

ATTACHED 10-FOOT SIDEWALK WITH 4'x5' TREEWELL	Sunnyvale APPROVED BY:	
	DATE : SEPT 2013 REVISED : SEPT 2018	DWG. 9C-2A

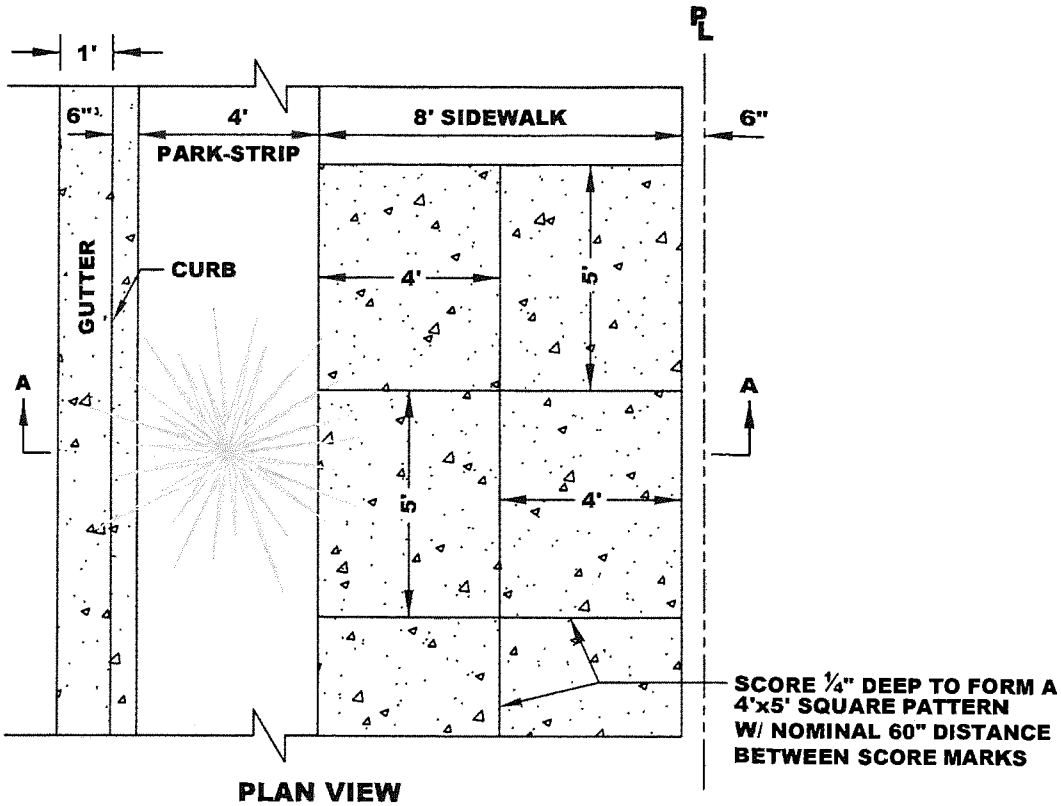

PLAN VIEW
NO SCALE

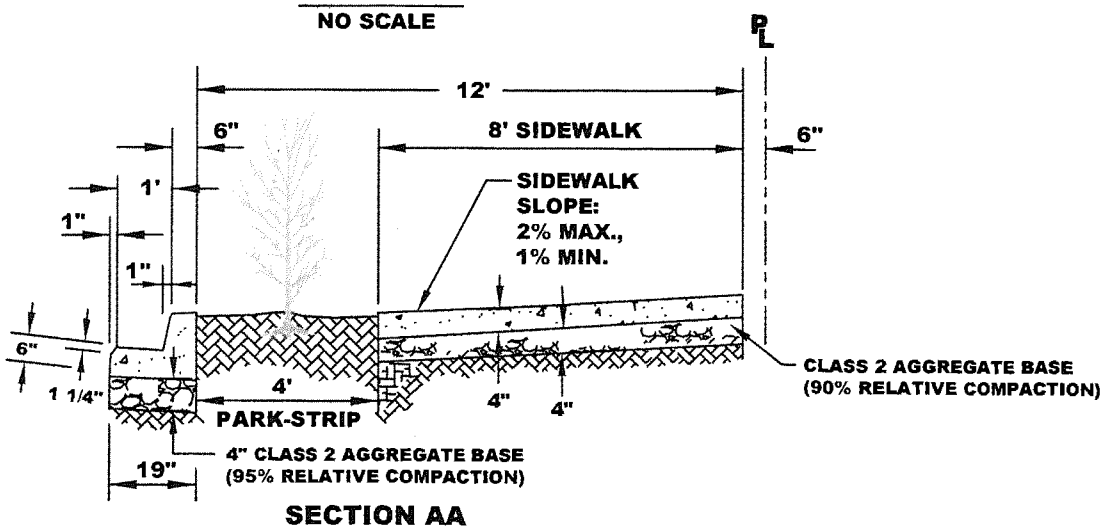

SECTION AA
NO SCALE

NOTE: SEE STANDARD DETAILS 13F & 14F FOR INSTALLATION OF ROOT BARRIER, IF CITY DETERMINES ROOT BARRIER IS NECESSARY.

WHEN REPLACING EXISTING CURB W/ NEW, REPLACE PRE-EXISTING CURB MARKS & PAINT (ESPECIALLY THOSE MARKS IDENTIFYING SEWER OR VALVE FEATURES).
USE 1 PINT LAMPBLACK PER CUBIC YARD OF CONCRETE

EXPANSION JOINT AT EVERY 60 FEET AND DEEP SCORE (1 $\frac{1}{4}$") AT EVERY 10 FEET

FOR NEW CURB AND GUTTER INSTALLATION, SAWCUT 12" AC FROM LIP OF GUTTER AND REMOVE. REPLACE WITH NEW AC DEEP LIFT IN 3" LAYERS TO A TOTAL MIN. DEPTH OF 6" OR TO EXIST. THICKNESS PLUS AN ADDITIONAL 1", WHICHEVER IS GREATER.

DETACHED 8-FOOT SIDEWALK WITH 4-FOOT PARK-STRIP	APPROVED BY:	
	DATE : SEPT, 2013 REVISED :	DWG. 9C-3

2013 STANDARD DETAILS

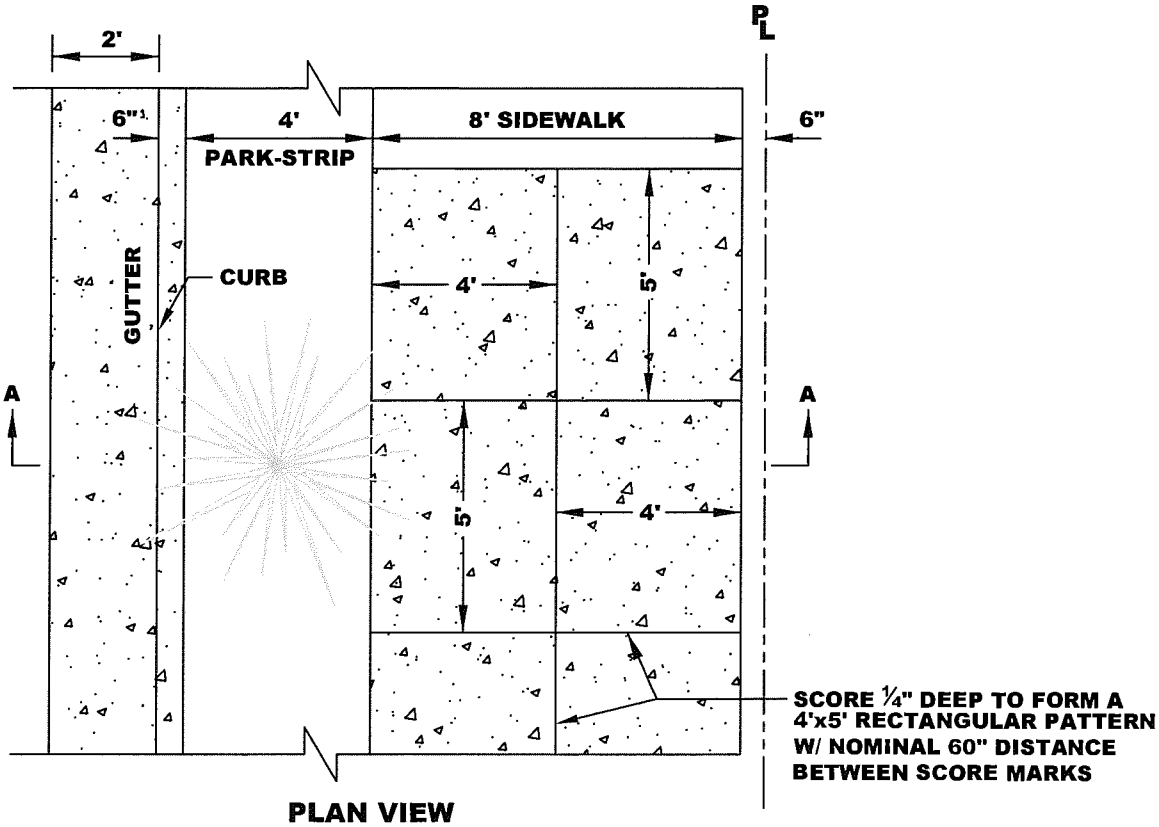

PLAN VIEW
NO SCALE

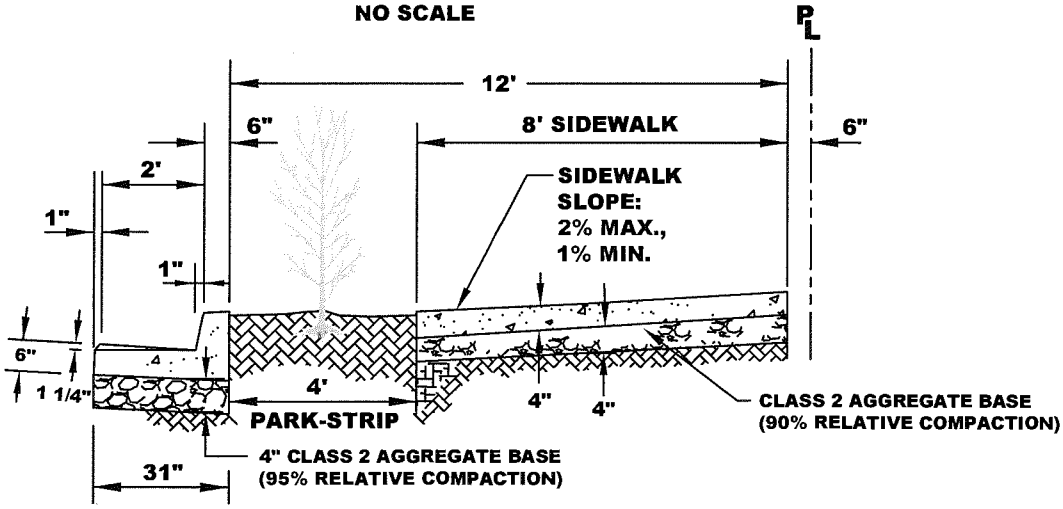

SECTION AA
NO SCALE

NOTE: SEE STANDARD DETAILS 13F & 14F FOR INSTALLATION OF ROOT BARRIER, IF CITY DETERMINES ROOT BARRIER IS NECESSARY.

WHEN REPLACING EXISTING CURB W/ NEW, REPLACE PRE-EXISTING CURB MARKS & PAINT (ESPECIALLY THOSE MARKS IDENTIFYING SEWER OR VALVE FEATURES).
USE 1 PINT LAMPBLACK PER CUBIC YARD OF CONCRETE

EXPANSION JOINT AT EVERY 60 FEET AND DEEP SCORE (1 ¼") AT EVERY 10 FEET

FOR NEW CURB AND GUTTER INSTALLATION, SAWCUT 24" MINIMUM AC FROM LIP OF GUTTER AND REMOVE. REPLACE WITH NEW AC DEEP LIFT IN 3" LAYERS TO A TOTAL MIN. DEPTH OF 6" OR TO EXIST. THICKNESS PLUS AN ADDITIONAL 1", WHICHEVER IS GREATER.

DETACHED 8-FOOT SIDEWALK WITH 4-FOOT PARK-STRIP	Sunnyvale APPROVED BY:	
	DATE : SEPT 2013 REVISED : SEPT 2018	DWG. 9C-3A

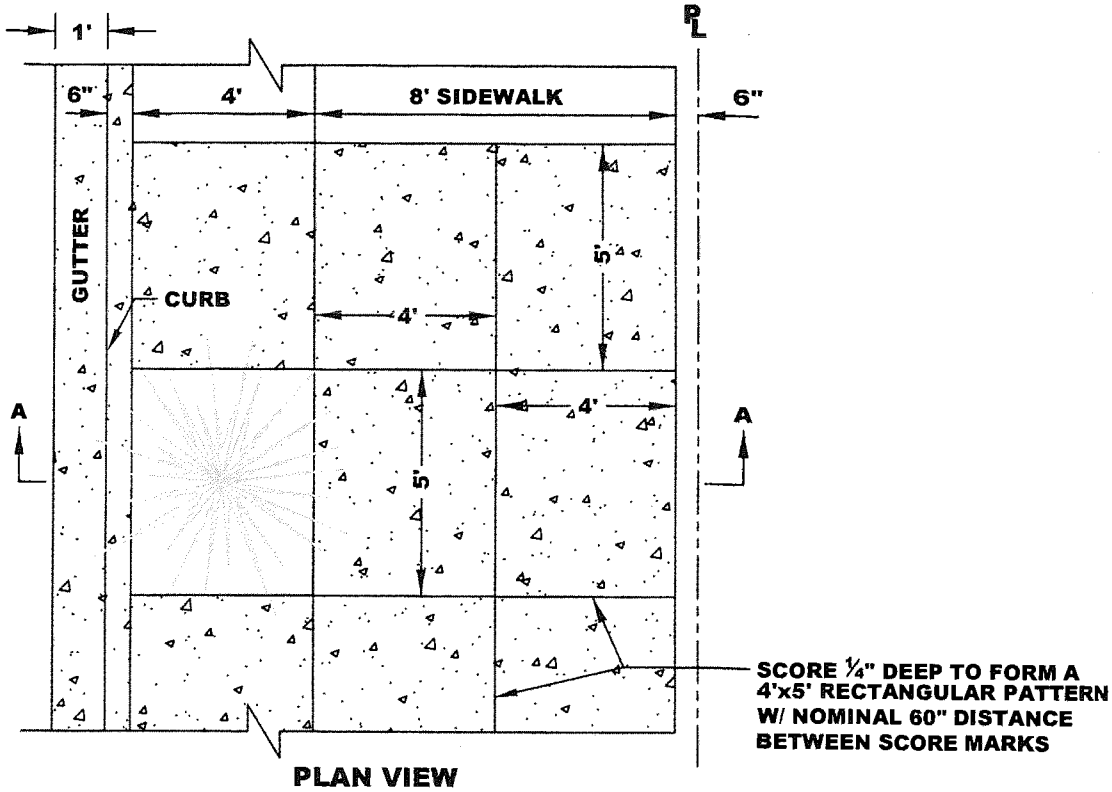

PLAN VIEW
NO SCALE

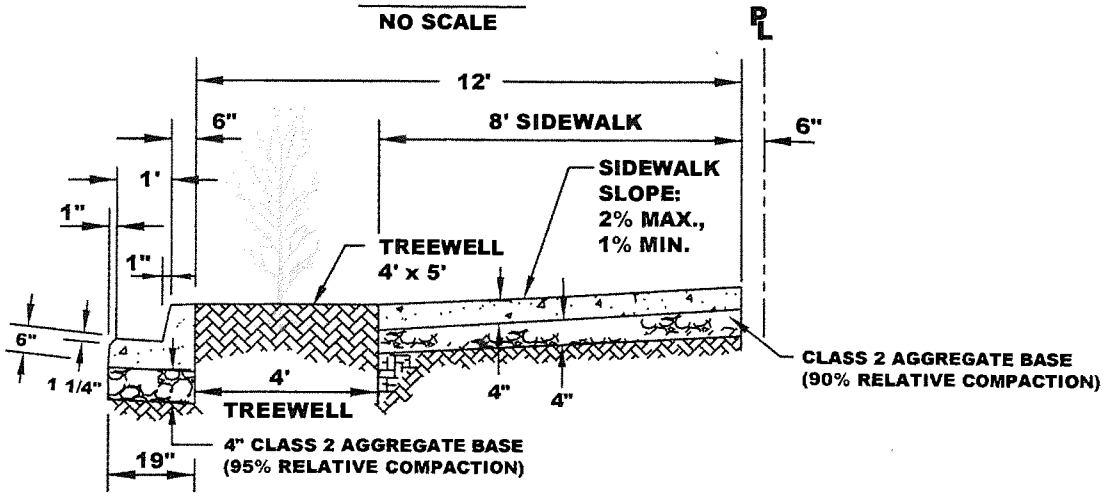

SECTION AA
NO SCALE

NOTE: SEE STANDARD DETAILS 13F & 14F FOR INSTALLATION OF ROOT BARRIER, IF CITY DETERMINES ROOT BARRIER IS NECESSARY.

WHEN REPLACING EXISTING CURB W/ NEW, REPLACE PRE-EXISTING CURB MARKS & PAINT (ESPECIALLY THOSE MARKS IDENTIFYING SEWER OR VALVE FEATURES).
USE 1 PINT LAMPBLACK PER CUBIC YARD OF CONCRETE

EXPANSION JOINT AT EVERY 60 FEET AND DEEP SCORE (1 $\frac{1}{4}$") AT EVERY 10 FEET

FOR NEW CURB AND GUTTER INSTALLATION, SAWCUT 12" AC FROM LIP OF GUTTER AND REMOVE. REPLACE WITH NEW AC DEEP LIFT IN 3" LAYERS TO A TOTAL MIN. DEPTH OF 6" OR TO EXIST. THICKNESS PLUS AN ADDITIONAL 1", WHICHEVER IS GREATER.

ATTACHED 12-FOOT SIDEWALK WITH 4'x5' TREEWELL	APPROVED BY:	
	DATE : SEPT, 2013 REVISED :	DWG. 9C-4

2013 STANDARD DETAILS

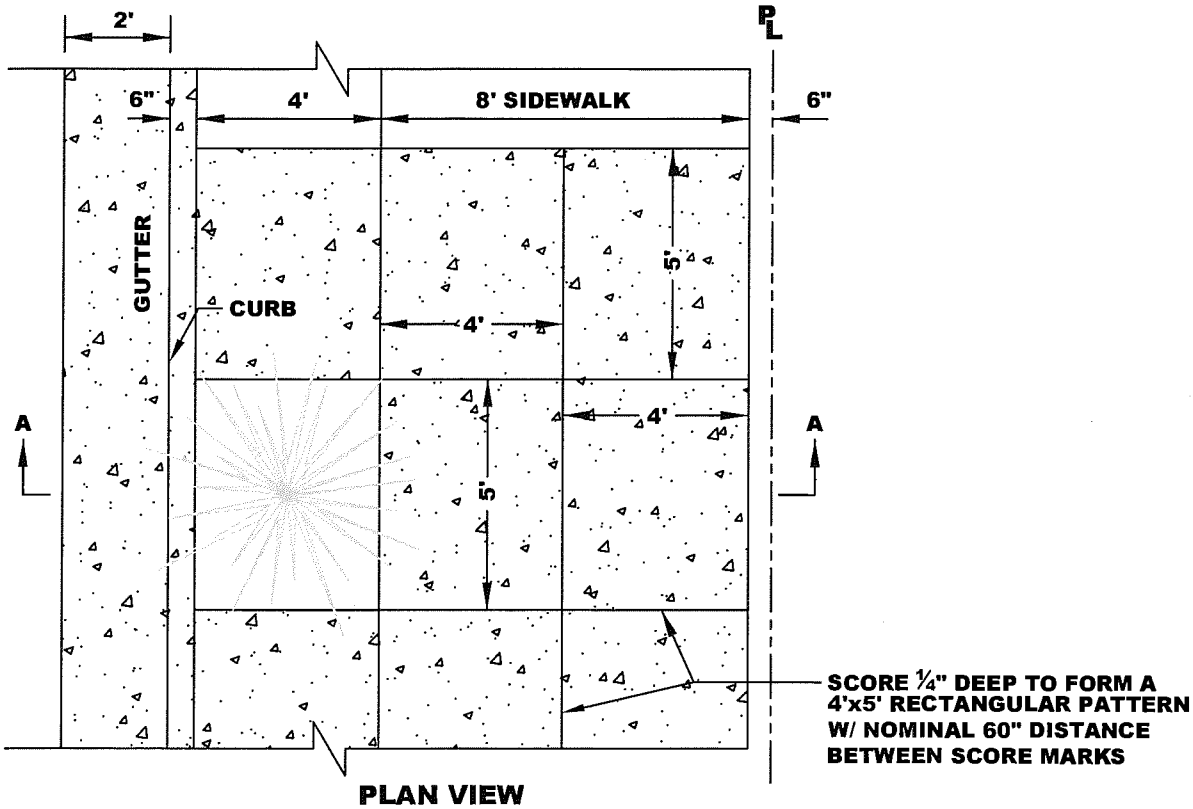

PLAN VIEW
NO SCALE

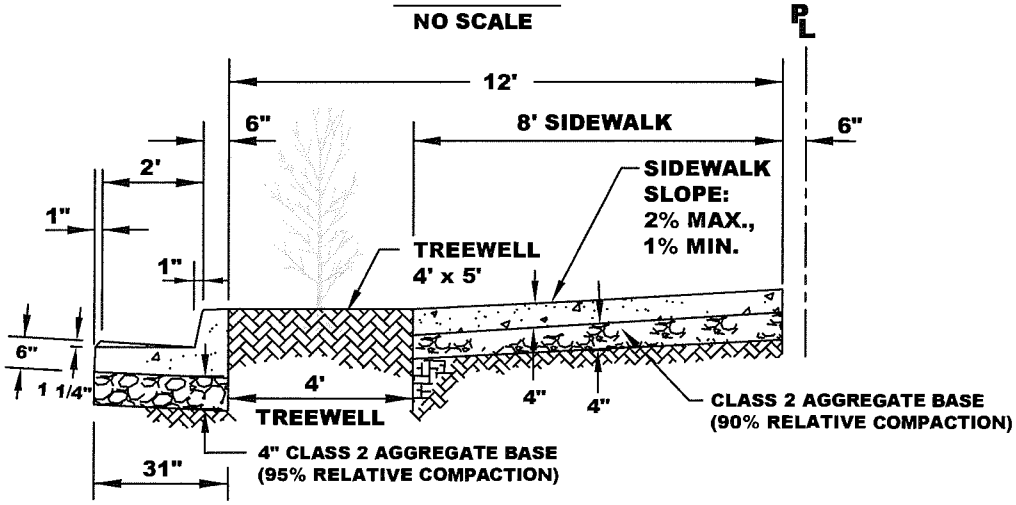

SECTION AA
NO SCALE

NOTE: SEE STANDARD DETAILS 13F & 14F FOR INSTALLATION OF ROOT BARRIER, IF CITY DETERMINES ROOT BARRIER IS NECESSARY.

WHEN REPLACING EXISTING CURB W/ NEW, REPLACE PRE-EXISTING CURB MARKS & PAINT (ESPECIALLY THOSE MARKS IDENTIFYING SEWER OR VALVE FEATURES).
USE 1 PINT LAMPBLACK PER CUBIC YARD OF CONCRETE

EXPANSION JOINT AT EVERY 60 FEET AND DEEP SCORE (1 ¼") AT EVERY 10 FEET

FOR NEW CURB AND GUTTER INSTALLATION, SAWCUT 24" MINIMUM AC FROM LIP OF GUTTER AND REMOVE. REPLACE WITH NEW AC DEEP LIFT IN 3" LAYERS TO A TOTAL MIN. DEPTH OF 6" OR TO EXIST. THICKNESS PLUS AN ADDITIONAL 1", WHICHEVER IS GREATER.

ATTACHED 12-FOOT SIDEWALK WITH 4'x5' TREEWELL	Sunnyvale APPROVED BY:	
	DATE : SEPT 2013 REVISED : SEPT 2018	DWG. 9C-4A

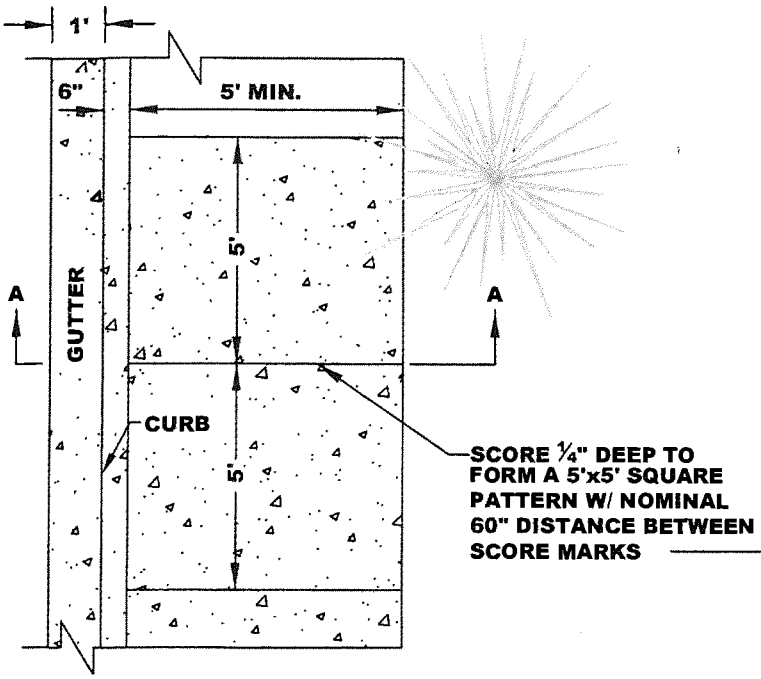

PLAN VIEW
NO SCALE

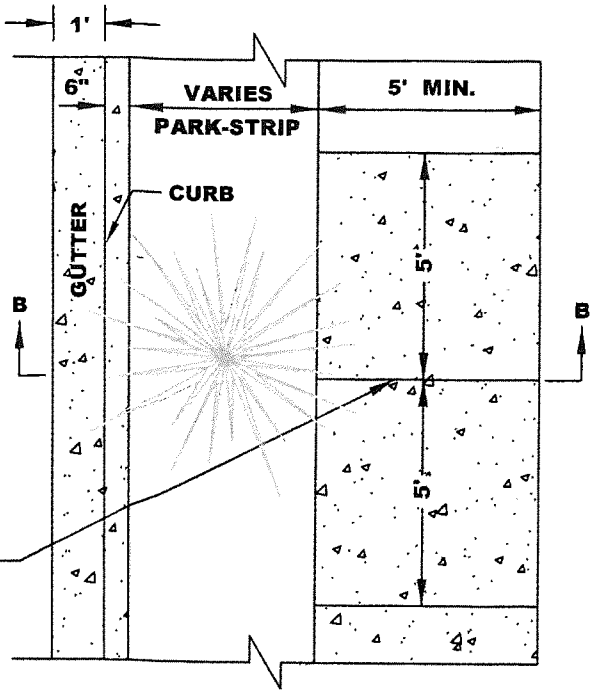

PLAN VIEW
NO SCALE

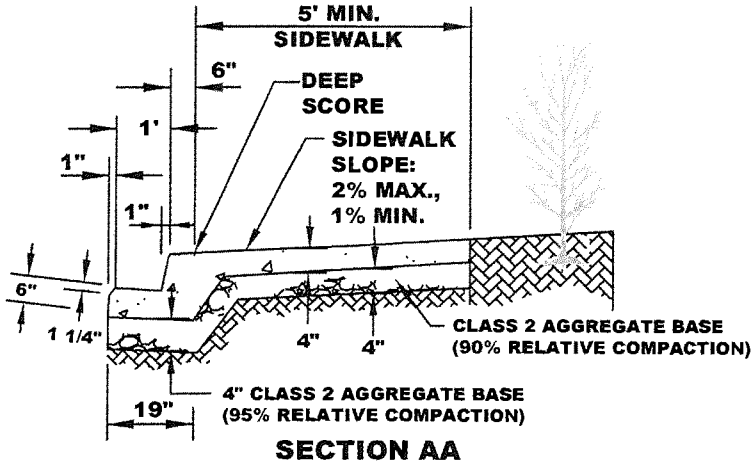

SECTION AA
NO SCALE

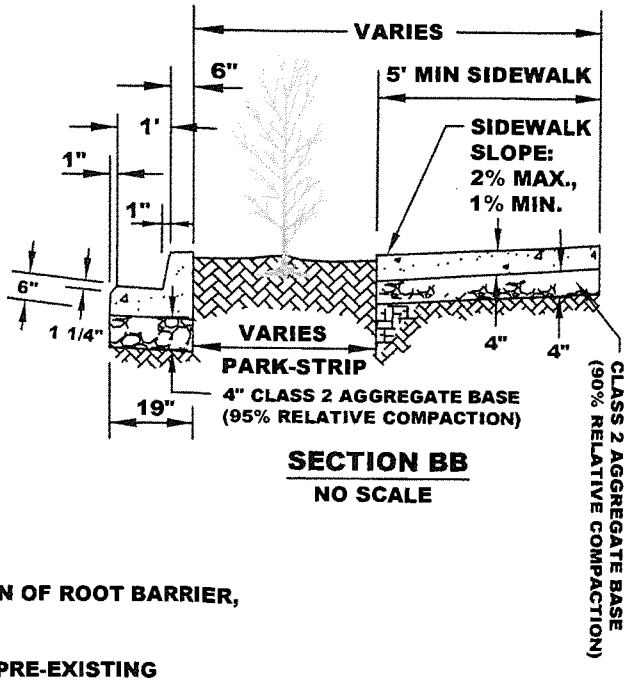

SECTION BB
NO SCALE

SIDEWALK TO MEANDER AROUND EXISTING TREES

NOTE: SEE STANDARD DETAILS 13F & 14F FOR INSTALLATION OF ROOT BARRIER, IF CITY DETERMINES ROOT BARRIER IS NECESSARY.

WHEN REPLACING EXISTING CURB W/ NEW, REPLACE PRE-EXISTING CURB MARKS & PAINT (ESPECIALLY THOSE MARKS IDENTIFYING SEWER OR VALVE FEATURES).
USE 1 PINT LAMPBLACK PER CUBIC YARD OF CONCRETE

EXPANSION JOINT AT EVERY 60 FEET AND DEEP SCORE (1 ¼") AT EVERY 10 FEET

FOR NEW CURB AND GUTTER INSTALLATION, SAWCUT 12" AC FROM LIP OF GUTTER AND REMOVE. REPLACE WITH NEW AC DEEP LIFT IN 3" LAYERS TO A TOTAL MIN. DEPTH OF 6" OR TO EXIST. THICKNESS PLUS AN ADDITIONAL 1", WHICHEVER IS GREATER.

NEW SIDEWALK **MAINTAIN EXISTING TREE**	APPROVED BY:	
	DATE : SEPT, 2013 REVISED :	DWG. 9C-5

2013 STANDARD DETAILS

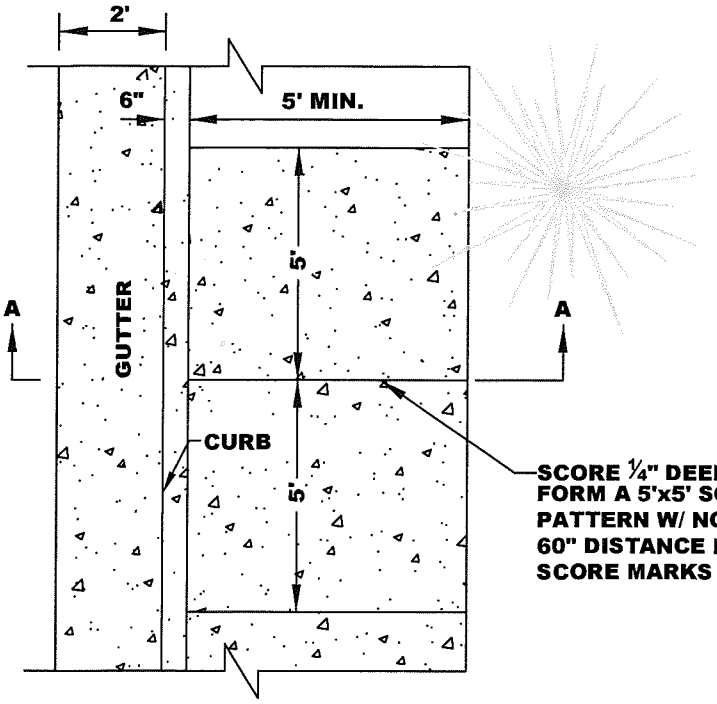

PLAN VIEW
NO SCALE

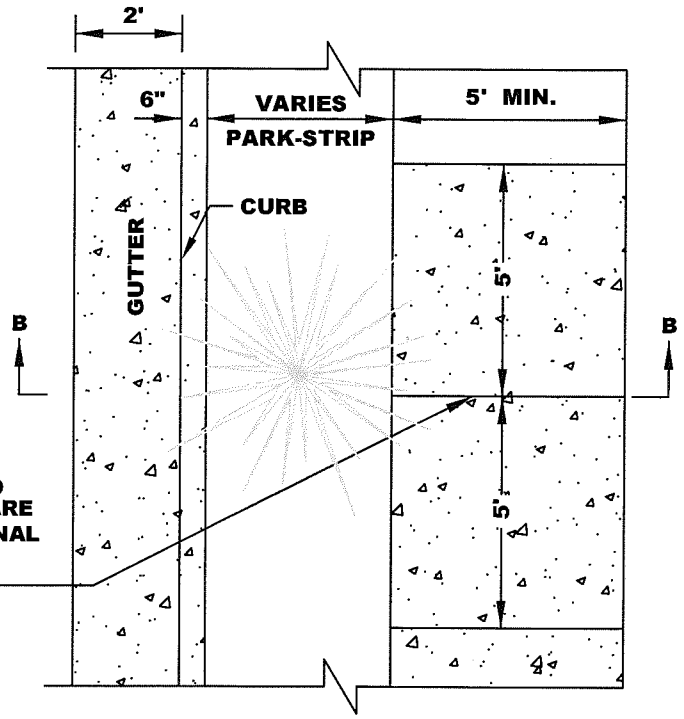

PLAN VIEW
NO SCALE

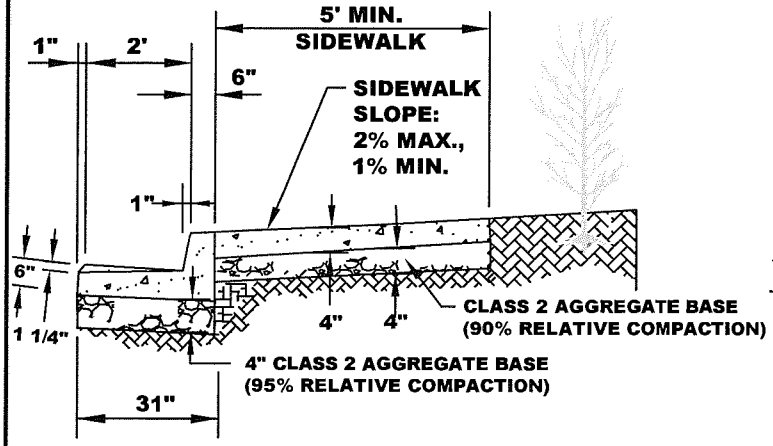

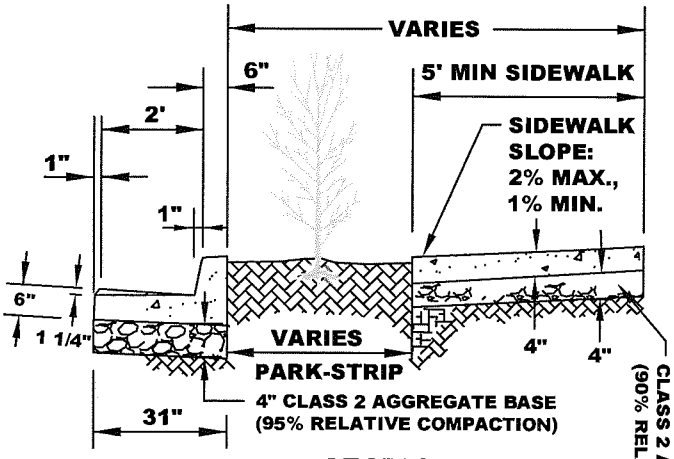

SECTION BB
NO SCALE

SIDEWALK TO MEANDER AROUND EXISTING TREES

NOTE: SEE STANDARD DETAILS 13F & 14F FOR INSTALLATION OF ROOT BARRIER, IF CITY DETERMINES ROOT BARRIER IS NECESSARY.

WHEN REPLACING EXISTING CURB W/ NEW, REPLACE PRE-EXISTING CURB MARKS & PAINT (ESPECIALLY THOSE MARKS IDENTIFYING SEWER OR VALVE FEATURES).
USE 1 PINT LAMPBLACK PER CUBIC YARD OF CONCRETE

EXPANSION JOINT AT EVERY 60 FEET AND DEEP SCORE (1 ¼") AT EVERY 10 FEET

FOR NEW CURB AND GUTTER INSTALLATION, SAWCUT 24" MINIMUM AC FROM LIP OF GUTTER AND REMOVE. REPLACE WITH NEW AC DEEP LIFT IN 3" LAYERS TO A TOTAL MIN. DEPTH OF 6" OR TO EXIST. THICKNESS PLUS AN ADDITIONAL 1", WHICHEVER IS GREATER.

NEW SIDEWALK **MAINTAIN EXISTING TREE**	Sunnyvale APPROVED BY:	
	DATE : SEPT 2013 REVISED : SEPT 2018	DWG. 9C-5A

SIDEWALK WIDTH (W)	# OF DOWELS	SPACING (S)
W ≤ 6'	2	EQUALLY SPACED
6' < W < 10'	3	EQUALLY SPACED
W ≥ 10'	4	EQUALLY SPACED

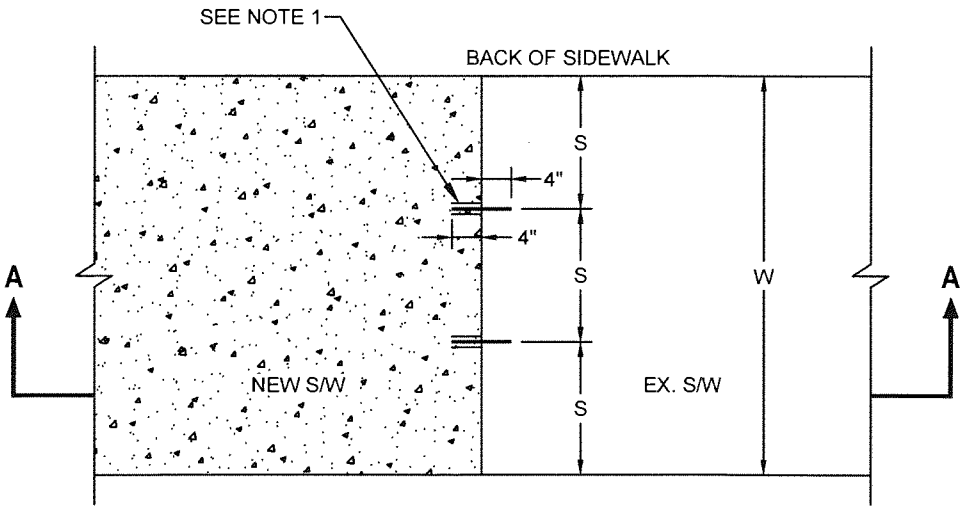

PLAN VIEW

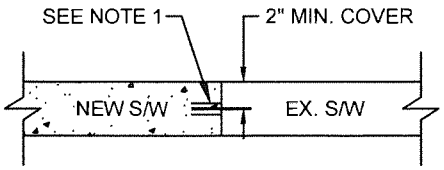

SECTION A-A

NOTES:

1. INSTALL 8" LONG #3 SMOOTH DOWEL. DRILL HOLES IN EXISTING SIDEWALK AND BLOW CLEAN. SLEEVE DOWEL SET IN NEW SIDEWALK.
2. NEW SIDEWALK SHALL MATCH THICKNESS OF EXISTING SIDEWALK.
3. IF EXISTING SIDEWALK IS LESS THAN 3" THICK, NOTIFY THE PUBLIC WORKS INSPECTOR PRIOR TO PLACEMENT OF DOWELS.
4. SEE CITY OF SUNNYVALE STANDARD SPECIFICATIONS FOR PUBLIC WORKS CONSTRUCTION FOR CONCRETE MIX DESIGN.

ABBREVIATIONS:

EX.	EXISTING
MIN.	MINIMUM
S/W	SIDEWALK

DOWEL CONNECTIONS TO EXISTING SIDEWALK

Sunnyvale

APPROVED BY:

DATE: JUNE 2019

DWG. 9C-6

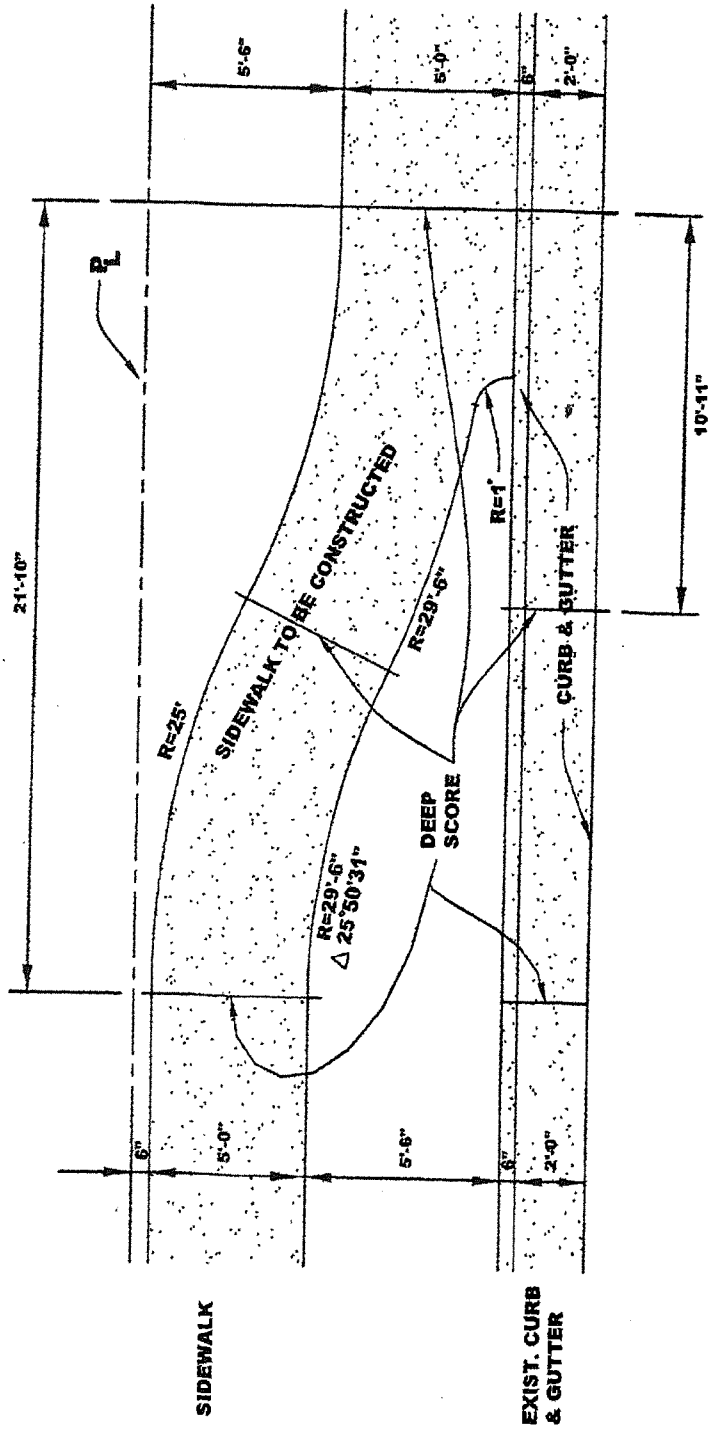

NOTE: SEE STANDARD DETAILS 13F & 14F FOR INSTALLATION OF ROOT BARRIER, IF CITY DETERMINES ROOT BARRIER IS NECESSARY

SIDEWALK TRANSITION DETAIL	APPROVED BY:	
	DATE : JUNE 30, 2006	DWG. 10C

2006 STANDARD DETAILS

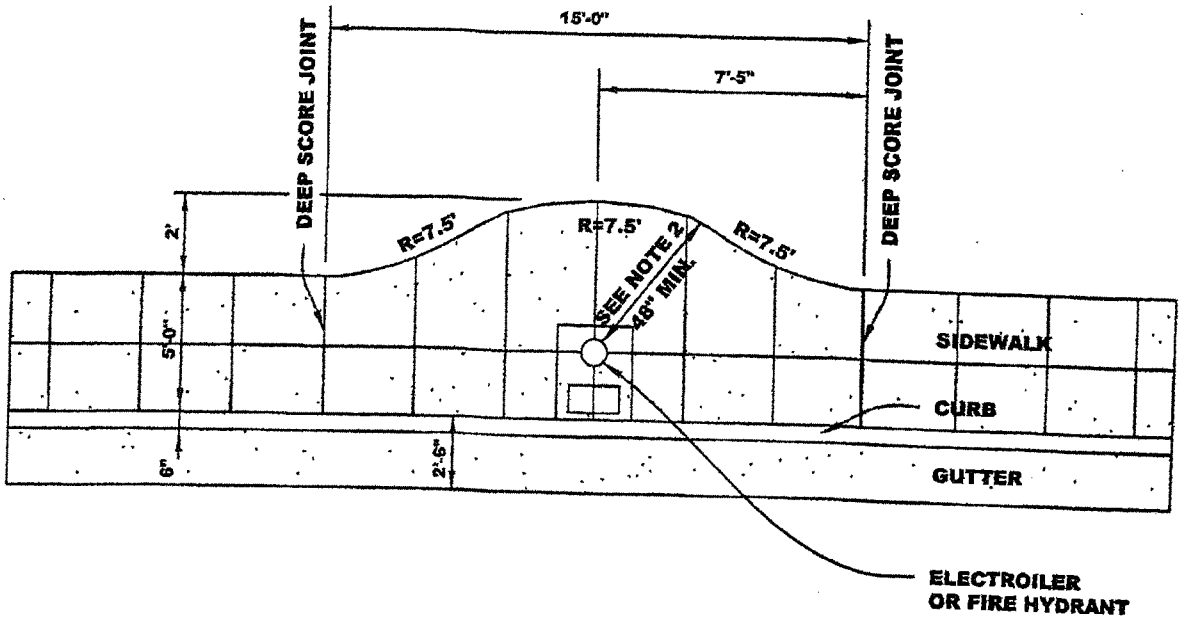

NOTE:

1. SEE STANDARD DETAILS 13F & 14F FOR INSTALLATION OF ROOT BARRIER, IF CITY DETERMINES ROOT BARRIER IS NECESSARY.
2. DIMENSION RELATING TO BACK OF SIDEWALK MAY NEED TO BE ADJUSTED & ENSURE A MINIMUN 4'-0" CLEARANCE.

SIDEWALK TRANSITION AROUND EXISTING ELECTROILERS OR FIRE HYDRANT	APPROVED BY:	
	DATE : JUNE 30, 2006	DWG. 11C

2006 STANDARD DETAILS

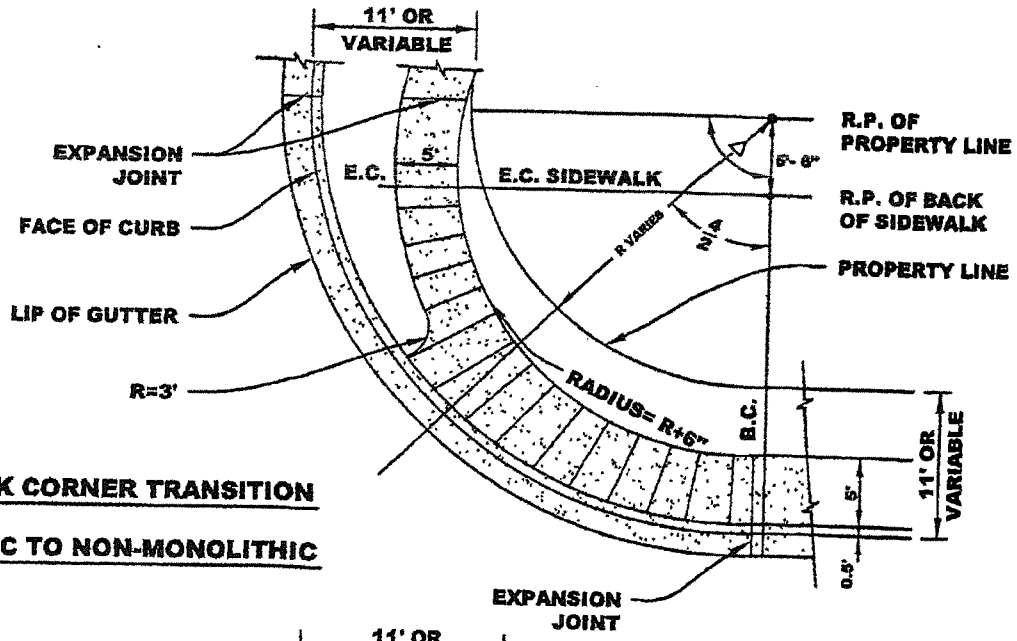

SIDEWALK CORNER TRANSITION

MONOLITIC TO NON-MONOLITHIC

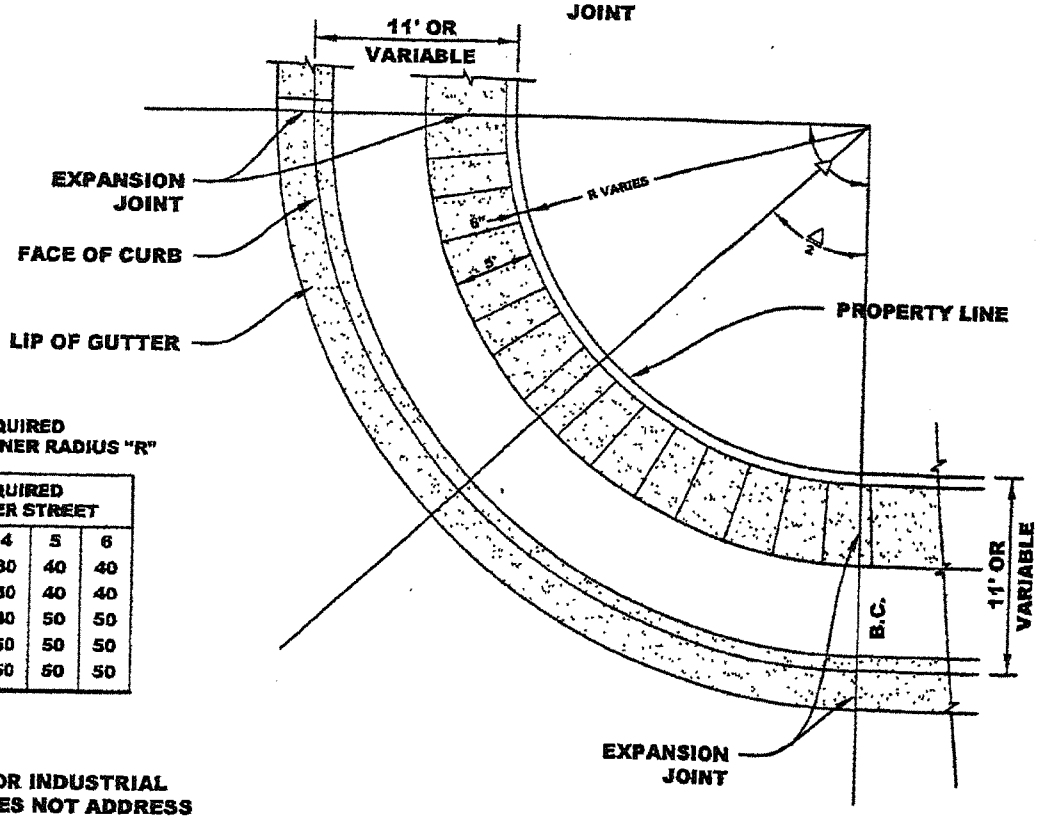

CHART FOR REQUIRED PROPERTY CORNER RADIUS "R"

NUMBER OF PROPOSED LANES ON OTHER STREET	CHART FOR REQUIRED LANES ON OTHER STREET				
	2	3	4	5	6
2	20	20	30	40	40
3	20	20	30	40	40
4	30	30	40	50	50
5	40	40	50	50	50
6	40	40	50	50	50

NOTE:

1. 30' MIN. RADIUS FOR INDUSTRIAL
2. THIS DRAWING DOES NOT ADDRESS CURB RAMP REQUIREMENTS AT STREET INTERSECTIONS.
3. SEE STANDARD DETAILS 13F & 14F FOR INSTALLATION OF ROOT BARRIER, IF CITY DETERMINES ROOT BARRIER IS NECESSARY.

SIDEWALK INTERSECTION	APPROVED BY:	
	DATE : JUNE 30, 2008	DWG. 12C

2006 STANDARD DETAILS

NOTES:

1. THE SURFACE SHALL BE ROUGH BROOM FINISH.
2. THERE SHALL BE A 12" WIDE BORDER OF 1/4" GROOVES SPACE AT APPROX. 3/4" O.C. (SEE GROOVE DETAIL).
3. IF THE MAXIMUM SLOPES AND MINIMUM DIMENSION CANNOT BE ACHIEVED, THE SIDEWALK SHALL BE DEPRESSED AS DETAILED IN 13C-3.
4. IF CONSTRUCTING NEW CURB RAMP IN EXISTING CURB, GUTTER, AND SIDEWALK, SAWCUT AC PAVEMENT AND REMOVE. REPLACE WITH NEW AC PAVEMENT AFTER CONSTRUCTION OF CURB RAMP, WITH DEEP LIFT IN 3" LAYERS TO A TOTAL MINIMUM DEPTH OF 6" OR TO EXISTING THICKNESS PLUS AN ADDITIONAL 1", WHICHEVER IS GREATER.
5. 1 PINT LAMP BACK PER CUBIC YARD CONCRETE.
6. RAMPS INSTALLED ON A CORNER WITH A RADIUS CURB SHALL HAVE THE WARNING SURFACE MEET THE RADIUS AT END CORNERS OF THE WARNING PANEL. THE PANEL SHALL NOT BE CUT AND SHALL REMAIN INTACT.

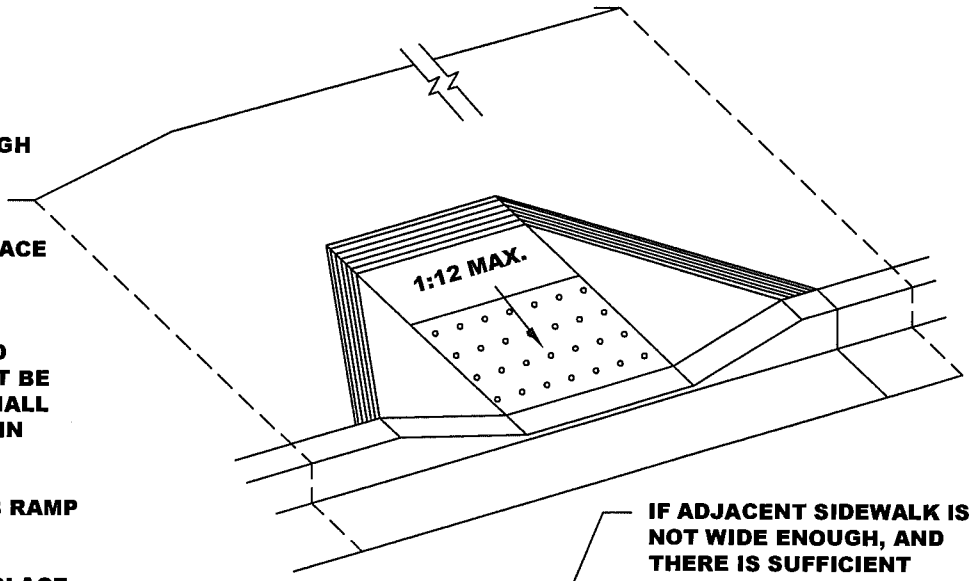

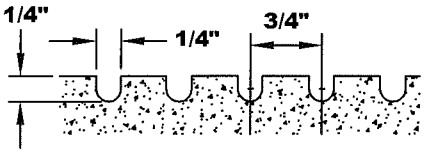

GROOVING DETAIL

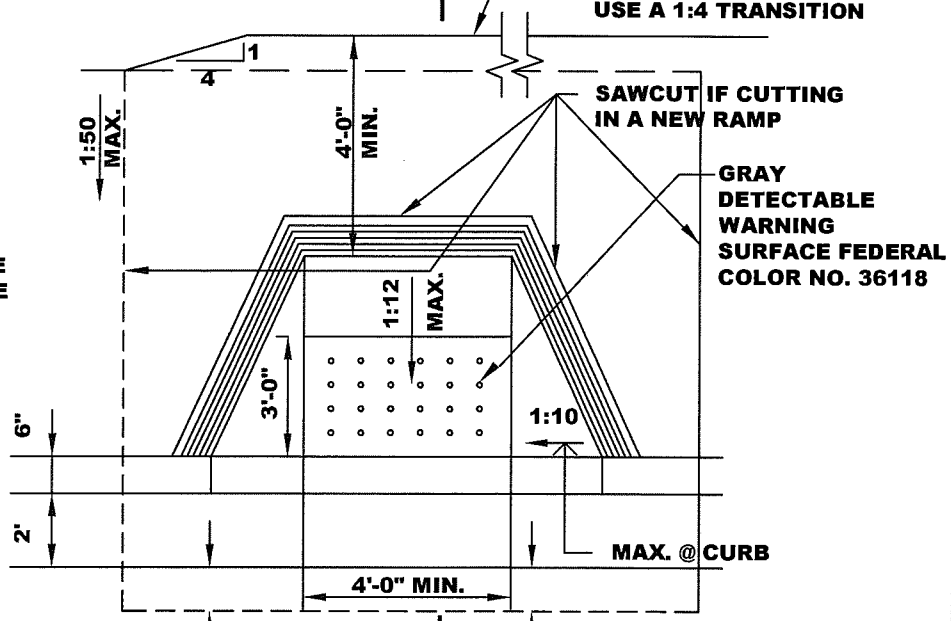

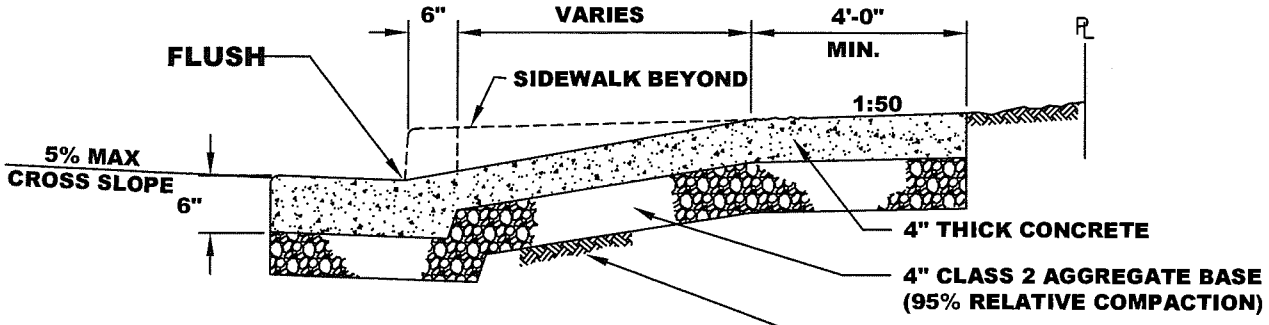

SECTION A - A

PERPENDICULAR CURB RAMP EXTRA WIDE SIDEWALK	Sunnyvale	APPROVED BY:
	DATE : JUNE 30, 2006 REVISED : APRIL 2019	DWG. 13C-1

NOTES:

1. THE SURFACE SHALL BE ROUGH BROOM FINISH.
2. THERE SHALL BE A 12" WIDE BORDER OF 1/4" GROOVES SPACED AT APPROX. 3/4" O.C. AS SHOWN.
3. FOR GROOVE DETAILS SEE 13C-1.
4. 1 PINT LAMP BACK PER CUBIC YARD CONCRETE.
5. IF CONSTRUCTING NEW CURB RAMP IN EXISTING CURB, GUTTER AND SIDEWALK, SAWCUT AC PAVEMENT AND REMOVE. REPLACE WITH NEW AC PAVEMENT AFTER CONSTRUCTION OF CURB RAMP, WITH DEEP LIFT IN 3" LAYERS TO A TOTAL MINIMUM DEPTH OF 6" OR TO EXISTING THICKNESS PLUS AN ADDITIONAL 1", WHICHEVER IS GREATER.
6. RAMPS INSTALLED ON A CORNER WITH A RADIUS CURB SHALL HAVE THE WARNING SURFACE MEET THE RADIUS AT END CORNERS OF THE WARNING PANEL. THE PANEL SHALL NOT BE CUT AND SHALL REMAIN INTACT.

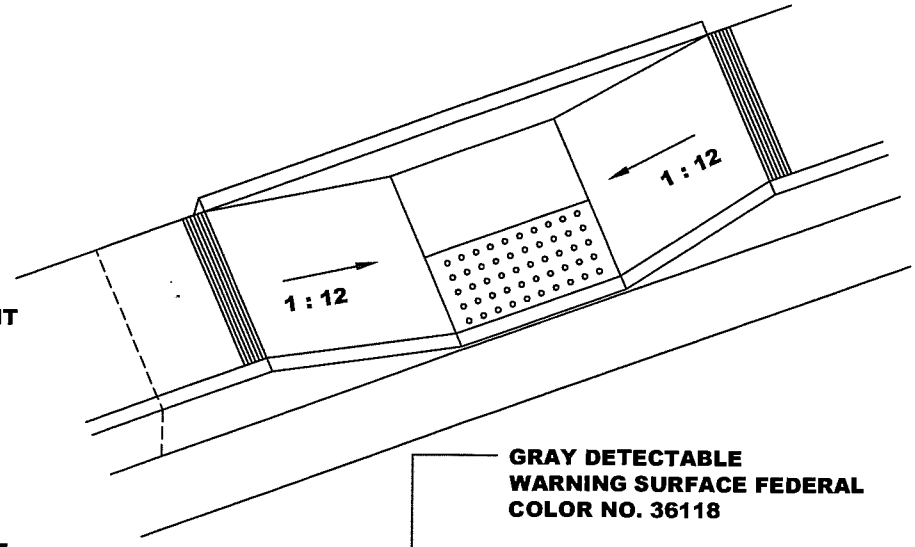

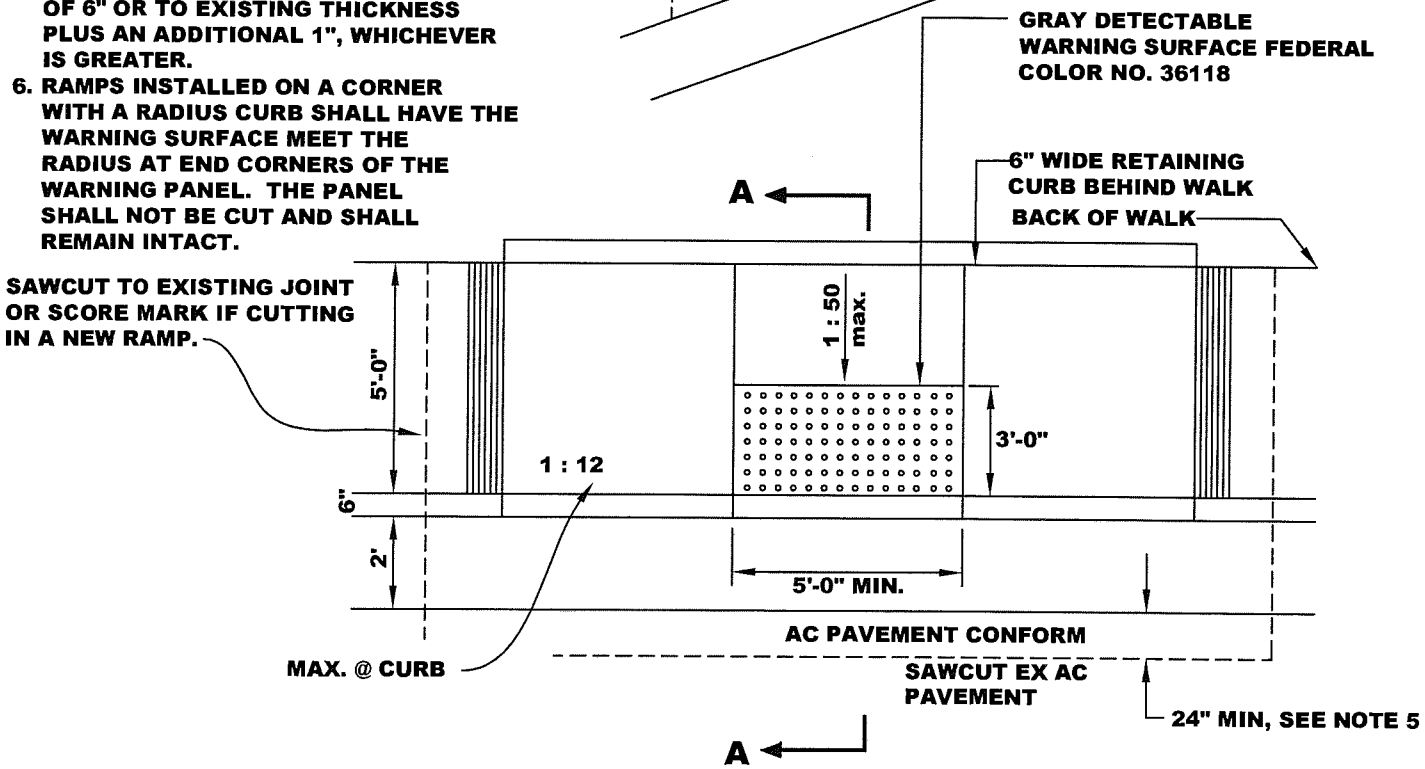

PLAN VIEW

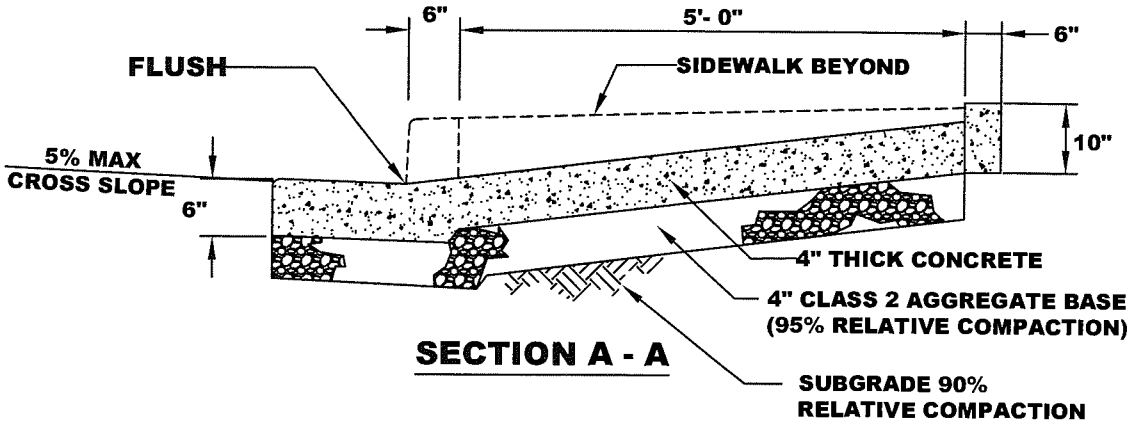

SECTION A - A

PARALLEL CURB RAMP MONOLITHIC SIDEWALK	Sunnyvale APPROVED BY:	
	DATE : JUNE 30, 2006 REVISED : APRIL 2019	DWG. 13C-2

NOTES:

1. THE SURFACE SHALL BE ROUGH BROOM FINISH.
2. FOR GROOVE DETAILS SEE 13C-1.
3. IF CONSTRUCTING NEW CURB RAMP IN EXISTING CURB, GUTTER AND SIDEWALK, SAWCUT AC PAVEMENT AND REMOVE. REPLACE WITH NEW AC PAVEMENT AFTER CONSTRUCTION OF CURB RAMP, WITH DEEP LIFT IN 3" LAYERS TO A TOTAL MINIMUM DEPTH OF 6" OR TO EXISTING THICKNESS PLUS AN ADDITIONAL 1", WHICHEVER IS GREATER.
4. 1 PINT LAMP BLACK PER CUBIC YARD CONCRETE.
5. RAMPS INSTALLED ON A CORNER WITH A RADIUS CURB SHALL HAVE THE WARNING SURFACE MEET THE RADIUS AT END CORNERS OF THE WARNING PANEL. THE PANEL SHALL NOT BE CUT AND SHALL REMAIN INTACT.

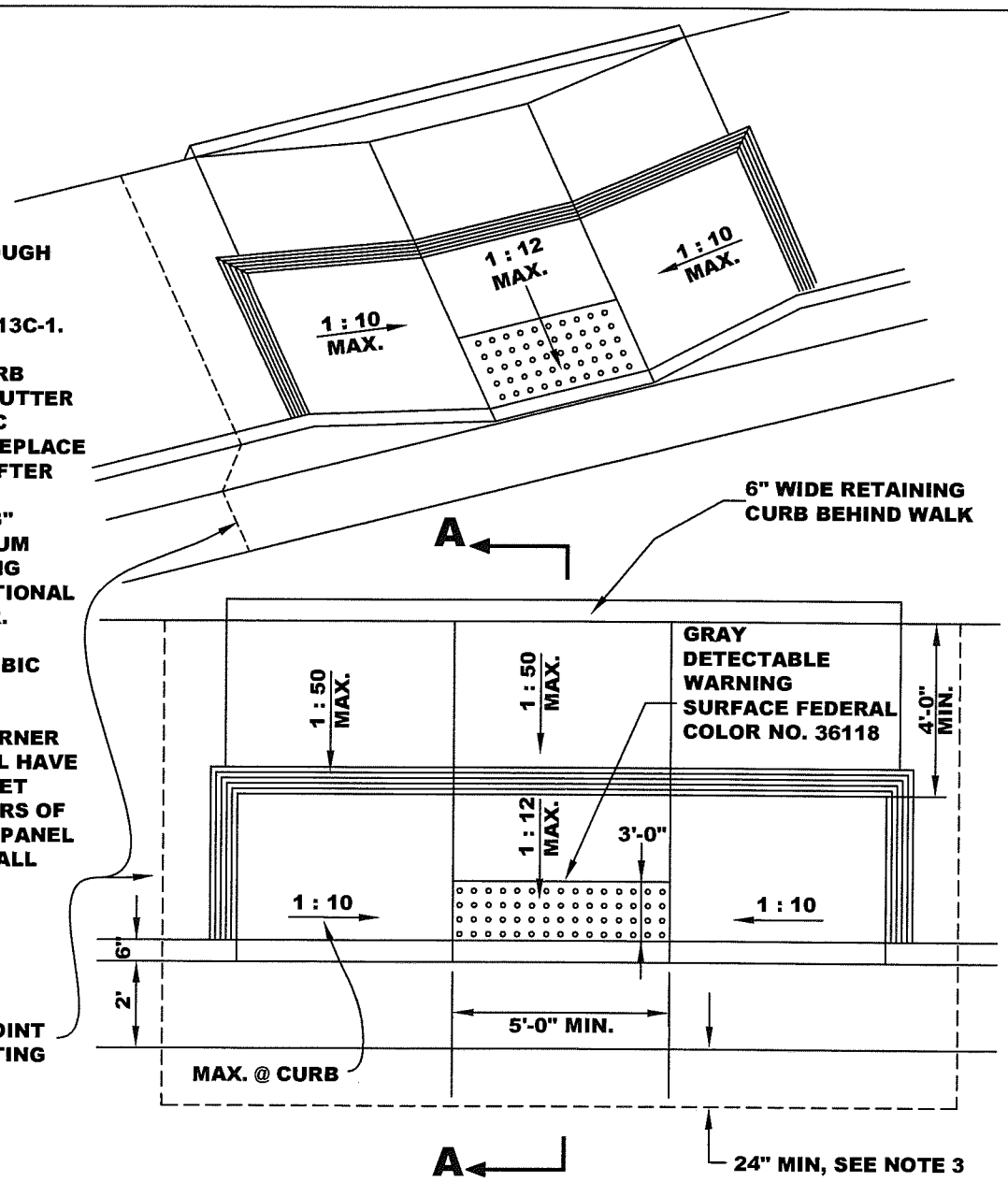

PLAN VIEW

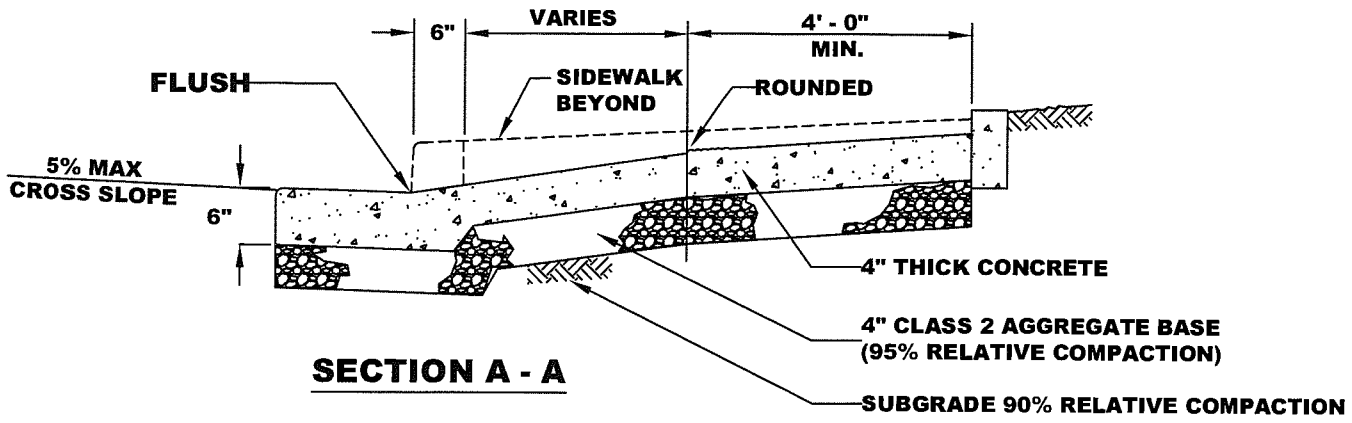

SECTION A - A

COMBINED PARALLEL/PERPENDICULAR CURB RAMP, EXTRA WIDE SIDEWALK	Sunnyvale APPROVED BY:	
	DATE : JUNE 30, 2006 REVISED : APRIL 2019	DWG. 13C-3

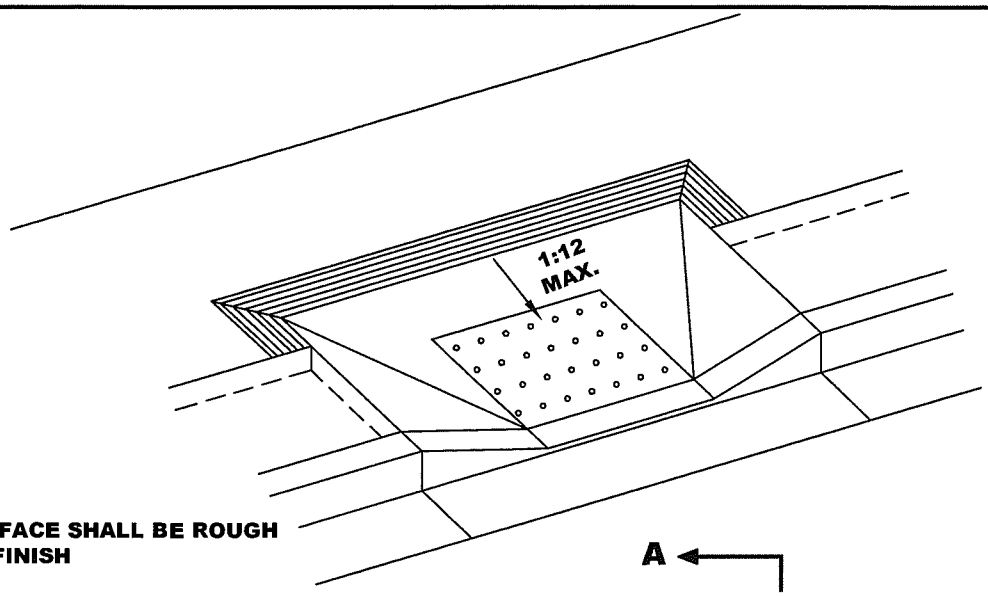

NOTES:

1. THE SURFACE SHALL BE ROUGH BROOM FINISH
2. FOR GROOVE DETAILS SEE 13C-1.
3. IF CONSTRUCTING NEW CURB RAMP IN EXISTING CURB, GUTTER AND SIDEWALK, SAWCUT AC PAVEMENT AND REMOVE. REPLACE WITH NEW AC PAVEMENT AFTER CONSTRUCTION OF CURB RAMP, WITH DEEP LIFT IN 3" LAYERS TO A TOTAL MINIMUM DEPTH OF 6" OR TO EXISTING THICKNESS PLUS AN ADDITIONAL 1", WHICHEVER IS GREATER.
4. 1 PINT LAMP BACK PER CUBIC YARD CONCRETE.
5. RAMPS INSTALLED ON A CORNER WITH A RADIUS CURB SHALL HAVE THE WARNING SURFACE MEET THE RADIUS AT END CORNERS OF THE WARNING PANEL. THE PANEL SHALL NOT BE CUT AND SHALL REMAIN INTACT.

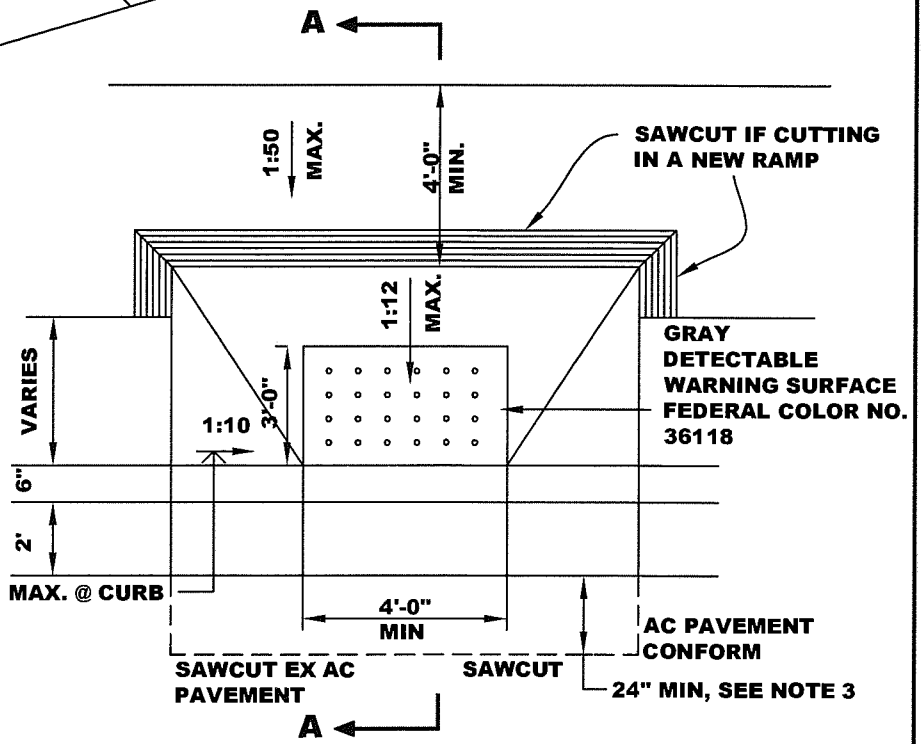

PLAN VIEW

NOTE:
IF THE MAX. SLOPES AND MIN. DIMENSIONS CANNOT BE ACHIEVED, THE SIDEWALK SHALL BE DEPRESSED AS DETAILED IN STD DWG 13C-5

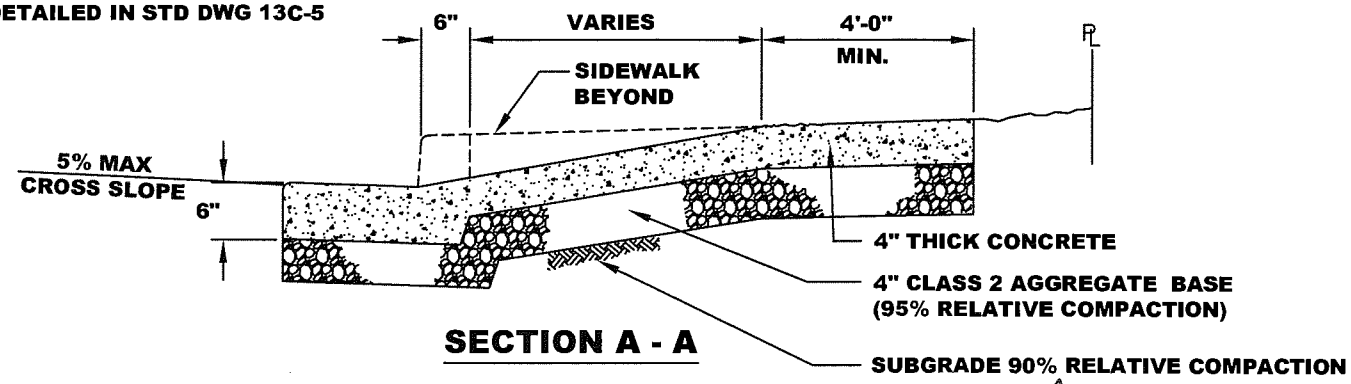

SECTION A - A

PERPENDICULAR CURB RAMP SEPARATED SIDEWALK	Sunnyvale	APPROVED BY:
	DATE : JUNE 30, 2006 REVISED : APRIL 2019	DWG. 13C-4

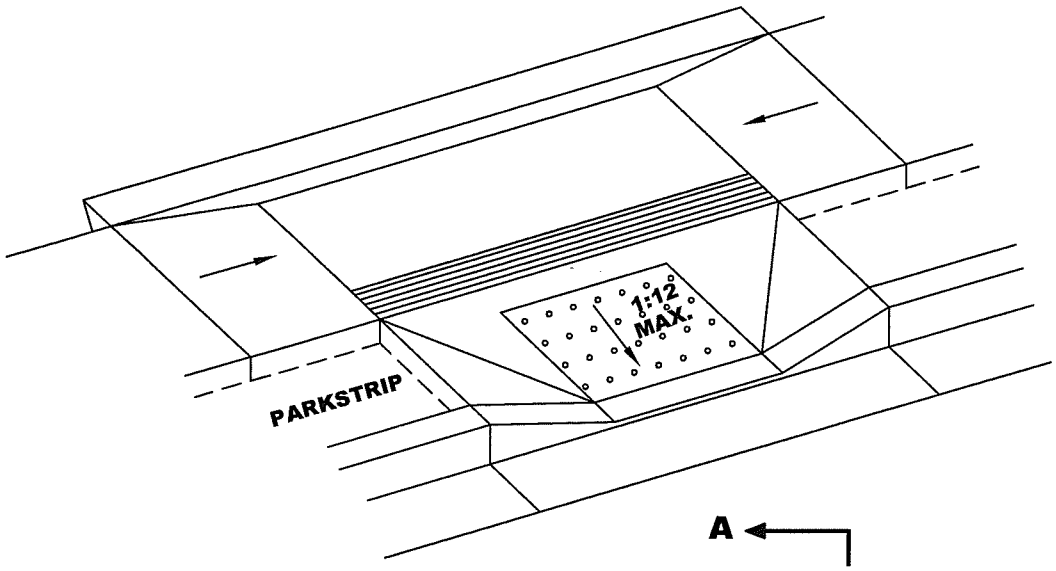

SAWCUT TO EXISTING JOINT OR SCORE MARK IF CUTTING IN A NEW CURB RAMP

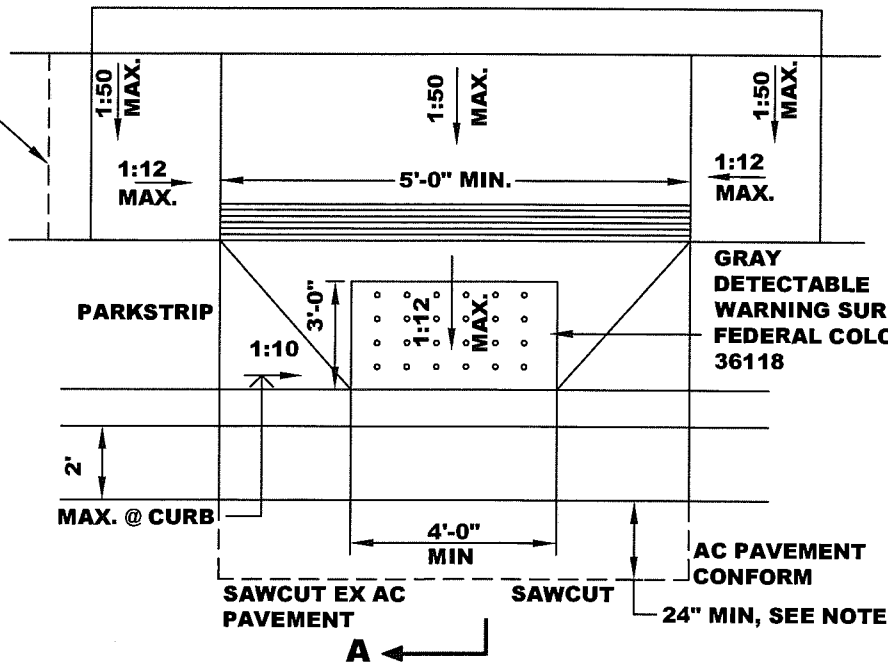

PLAN VIEW

NOTES:

1. THE SURFACE SHALL BE ROUGH BROOM FINISH.
2. FOR GROOVE DETAILS SEE 13C-1.
3. IF CONSTRUCTING NEW CURB RAMP IN EXISTING CURB, GUTTER AND SIDEWALK, SAWCUT AC PAVEMENT AND REMOVE. REPLACE WITH NEW AC PAVEMENT AFTER CONSTRUCTION OF CURB RAMP, WITH DEEP LIFT IN 3" LAYERS TO A TOTAL MINIMUM DEPTH OF 6" OR TO EXISTING THICKNESS PLUS AN ADDITIONAL 1", WHICHEVER IS GREATER.
4. 1 PINT LAMP BACK PER CUBIC YARD CONCRETE.
5. RAMPS INSTALLED ON A CORNER WITH A RADIUS CURB SHALL HAVE THE WARNING SURFACE MEET THE RADIUS AT END CORNERS OF THE WARNING PANEL. THE PANEL SHALL NOT BE CUT AND SHALL REMAIN INTACT.

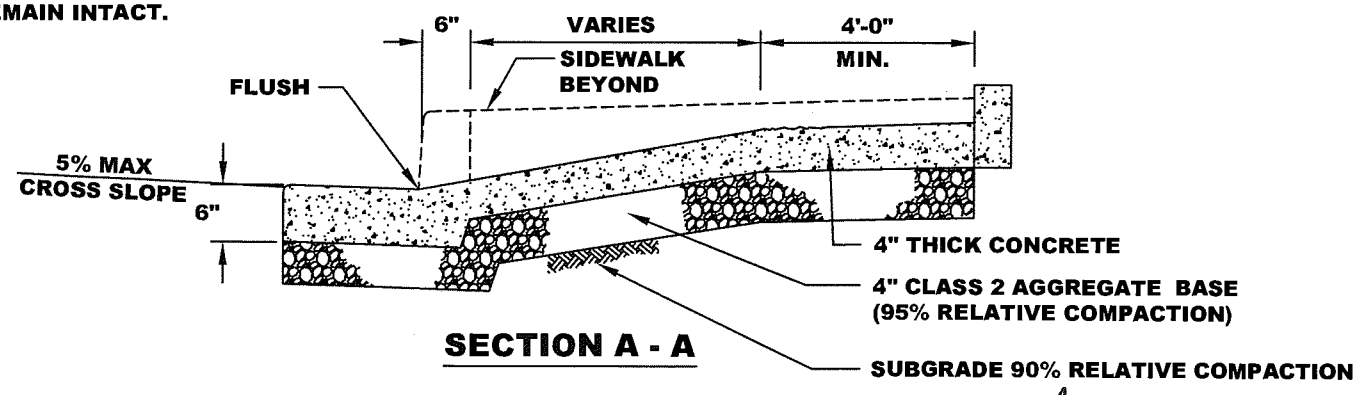

SECTION A - A

COMBINED PARALLEL / PERPENDICULAR CURB RAMPS SEPARATED SIDEWALK	Sunnyvale	APPROVED BY:
	DATE : JUNE 30, 2006 REVISED : APRIL 2019	DWG. 13C-5

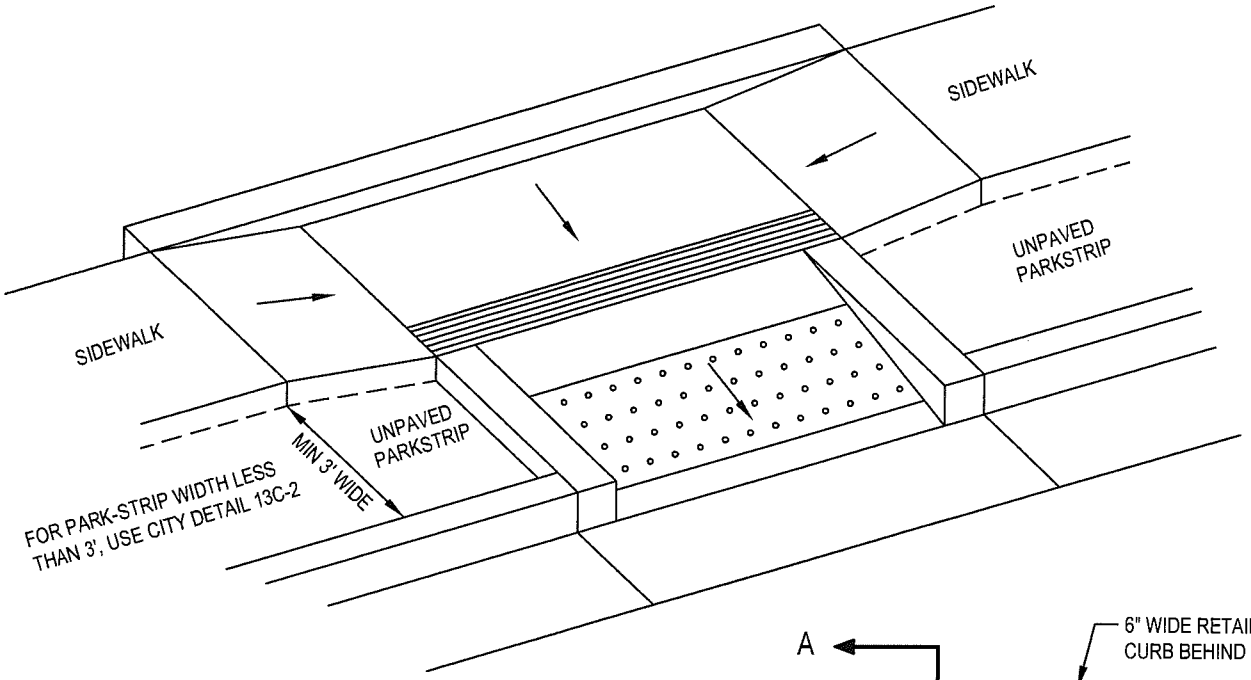

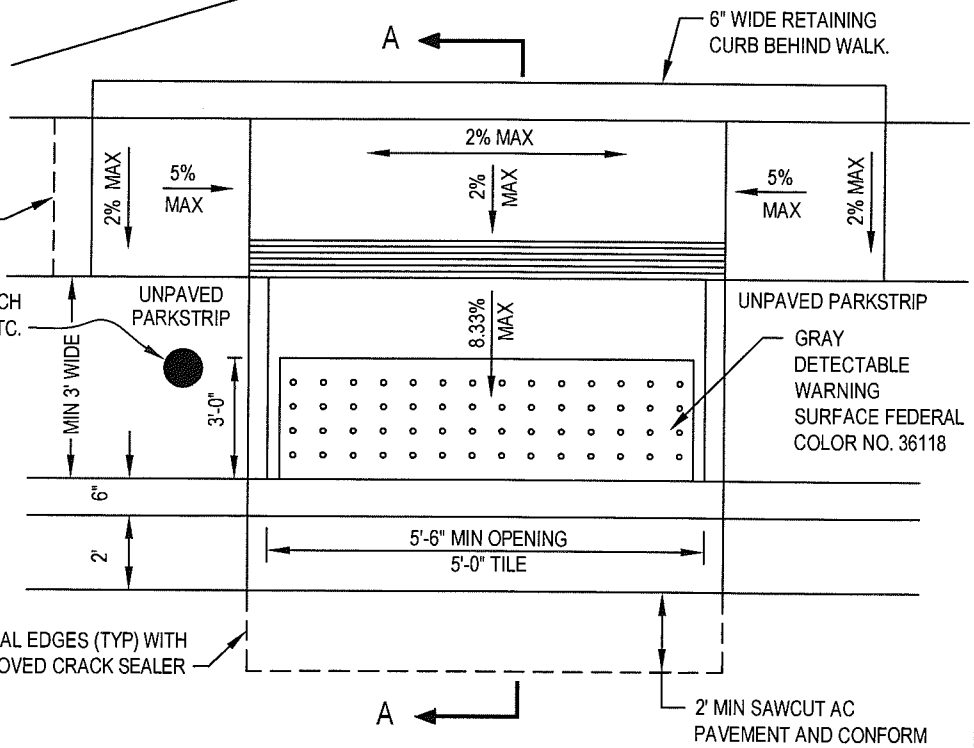

PLAN VIEW

NOTES:

1. THIS DETAIL IS TO BE USED WHEN A PHYSICAL OBSTRUCTION PROHIBITS THE USE OF CITY STANDARD DETAIL 13C-5.
2. THE SURFACE SHALL BE ROUGH BROOM FINISH.
2. FOR GROOVE DETAILS SEE 13C-1.
3. 1 PINT LAMP BACK PER CUBIC YARD.
4. RAMPS INSTALLED ON A CORNER WITH A RADIUS CURB SHALL HAVE THE WARNING SURFACE MEET THE RADIUS AT END CORNERS OF THE WARNING PANEL. THE PANEL SHALL NOT BE CUT AND SHALL REMAIN INTACT.

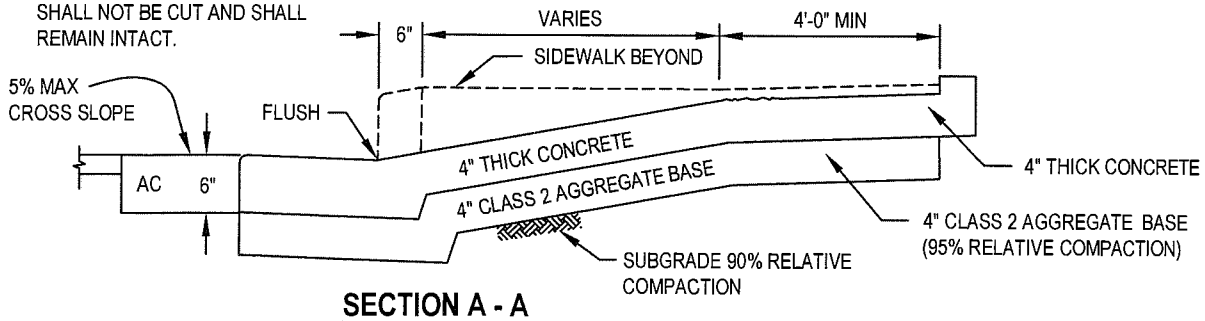

SECTION A - A

COMBINED PARALLEL / PERPENDICULAR CURB RAMPS SEPARATED SIDEWALK WITH PHYSICAL OBSTRUCTION	Sunnyvale APPROVED BY:	
	DATE : JULY 2016 REVISED : APRIL 2019	DWG. 13C-6

A 3" HIGH LETTER "S" OR "W" IS TO BE PLACED ON TOP OF CURB AT PROPER LOCATIONS OVER LATERALS.

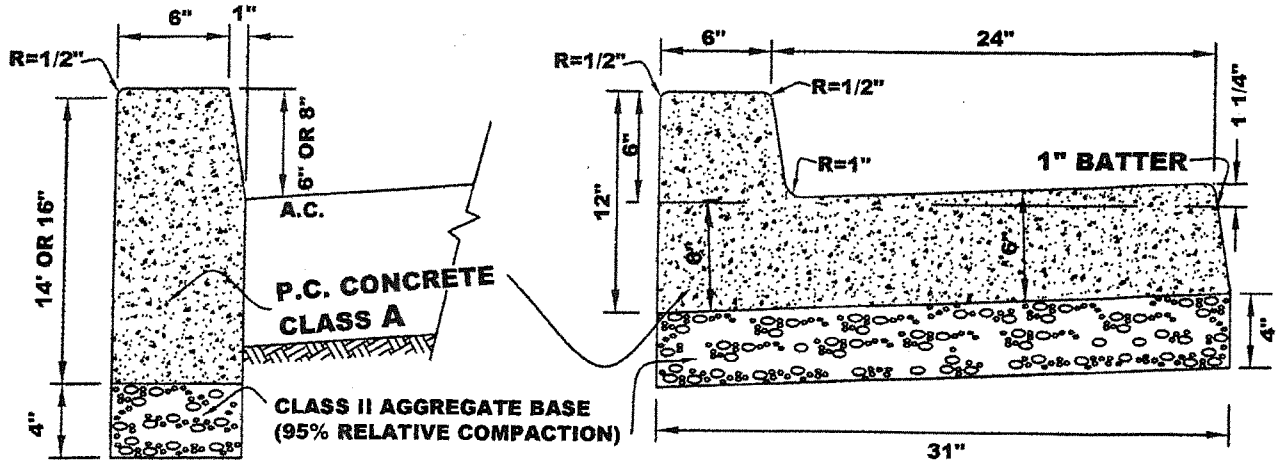

NOTE: PROVIDE 1 PINT LAMPBLACK / CUBIC YARD IN PCC

TYPE I-6 AND I-8 CURB

TYPE II CURB (24" GUTTER PAN)

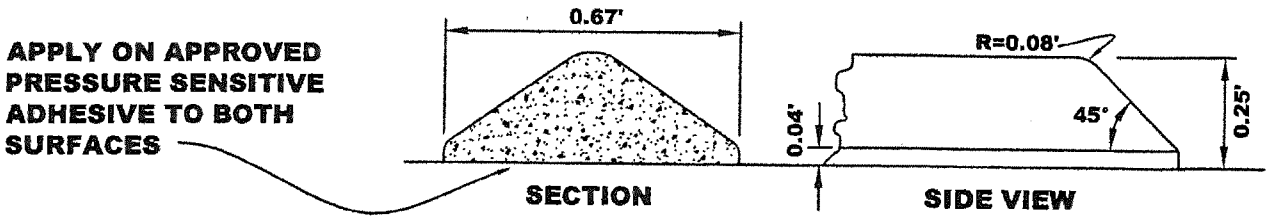

STD. RAISED TRAFFIC BARS

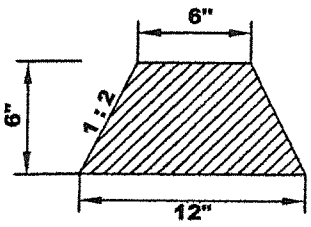

A.C. DIKE

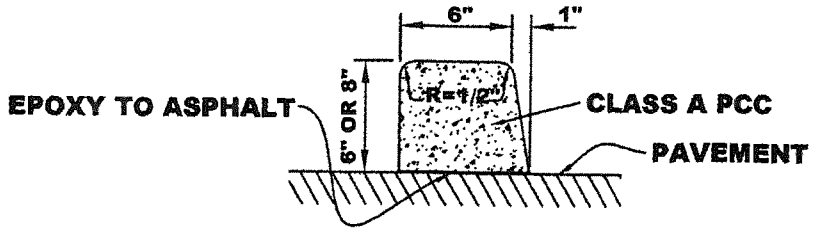

TYPE III-6 AND III-8 CURB

2006 STANDARD DETAILS

CURBS: TYPES I-6, I-8, II (24" GUTTER PAN) III-6, III-8, AC DIKE, AND TRAFFIC BARS	APPROVED BY:	
	DATE : JUNE 30, 2006 REVISED : APRIL 8, 2014	DWG. 15C

A 3" HIGH LETTER "S" OR "W" IS TO BE PLACED ON TOP OF CURB AT PROPER LOCATIONS OVER LATERALS.

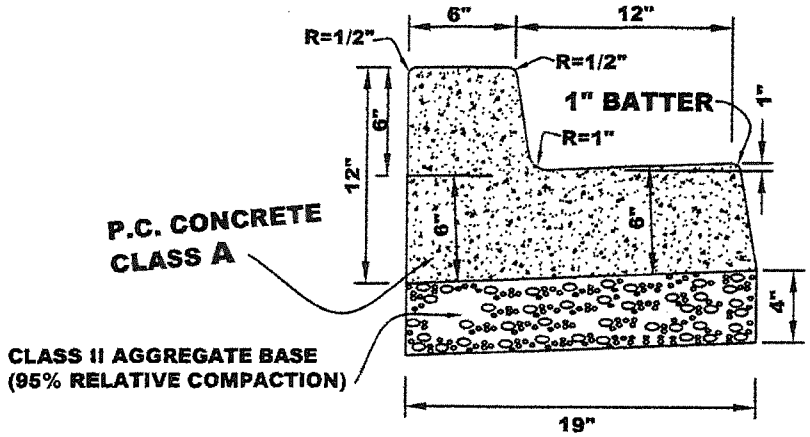

NOTE: PROVIDE 1 PINT LAMPBLACK / CUBIC YARD IN PCC

TYPE II CURB (12" GUTTER PAN)

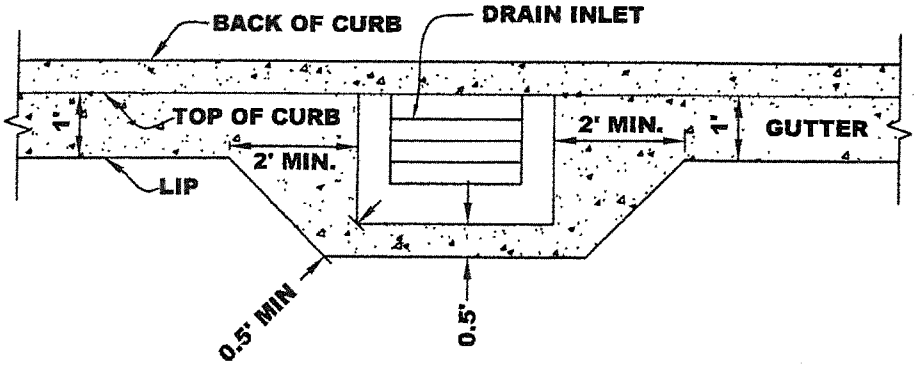

GUTTER TRANSITION AT DRAINAGE INLET

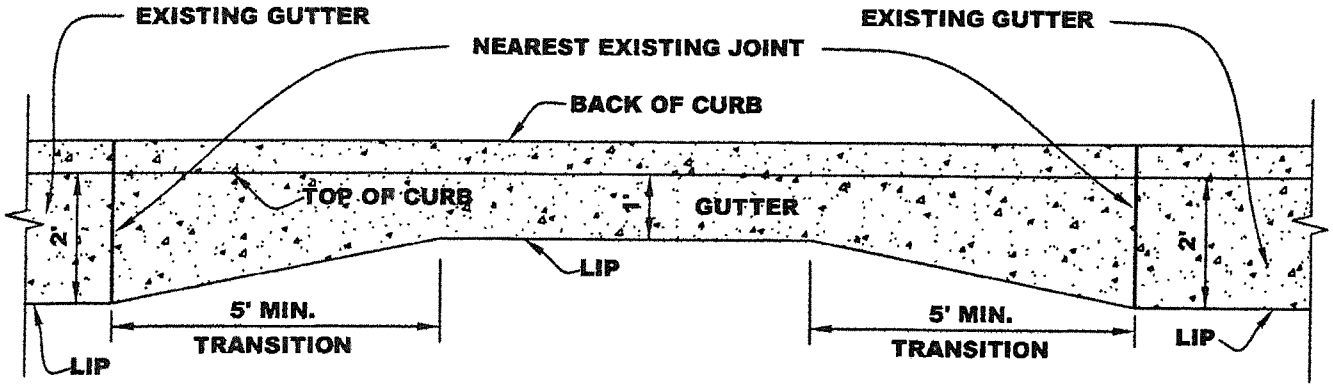

NOTE: PROVIDE POSITIVE DRAINAGE PATTERN & SMOOTH TRANSITION BETWEEN NEW 12-INCH GUTTER & EXISTING 24-INCH GUTTER.

GUTTER TRANSITION

CURB TYPE II (12" GUTTER PAN) AND GUTTER TRANSITION	APPROVED BY:	
	DATE : DEC 6, 2013 REVISED : APRIL 8, 2014	DWG. 15C-1

2013 STANDARD DETAILS

THIS DETAIL SHEET NOT USED

GUTTER TRANSITION	APPROVED BY:	
	DATE : DEC 6, 2013 REVISED : APRIL, 2014	DWG. 15C-2

2013 STANDARD DETAILS

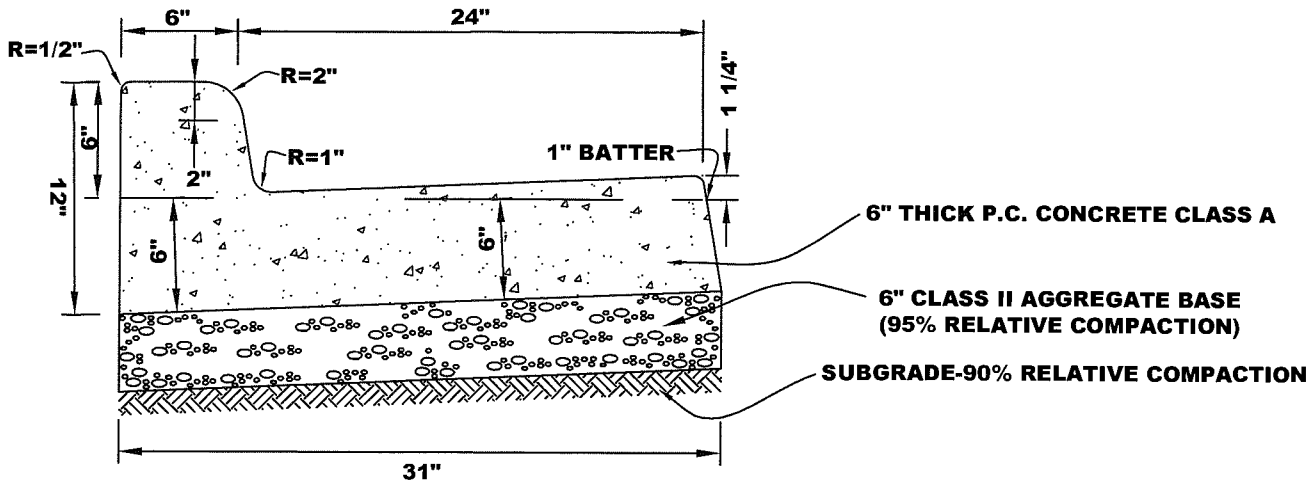

DETAIL A: MOUNTABLE CURB FOR FIRE TRUCK ACCESS ONLY

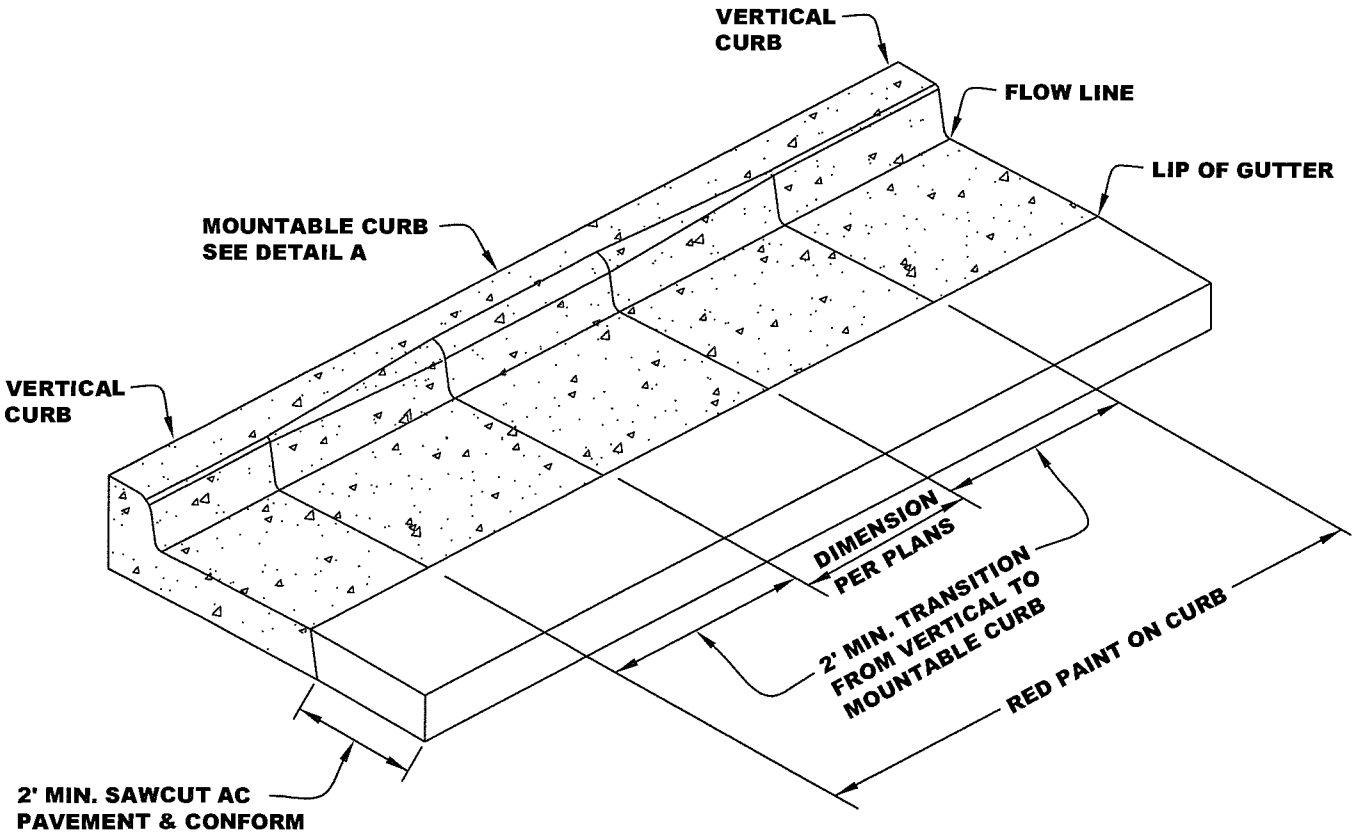

DETAIL B: MOUNTABLE / VERTICAL CURB TRANSITION

NOTE:

1. PROVIDE 1 PINT LAMPBLACK / CUBIC YARD IN PCC
2. TRANSITION FROM STANDARD TYPE II CURB SHALL BE MINIMUM 2 FEET IN LENGTH
3. SIDEWALK BEHIND THE MOUNTABLE CURB SHALL BE CONSTRUCTED PER CITY'S DETAIL 6C-4
4. THE RED PAINT ON CURB SHALL BE APPLIED OR AS DIRECTED BY DEPARTMENT OF PUBLIC WORKS

NOT TO SCALE

MOUNTABLE CURB FOR FIRE TRUCK ACCESS ONLY	Sunnyvale	APPROVED BY:
	DATE: APRIL 2019	DWG. 15C-3

NOTE :

THIS DRAWING DOES NOT ADDRESS SIDEWALK OR CURB RAMP REQUIREMENTS AT STREET INTERSECTIONS.

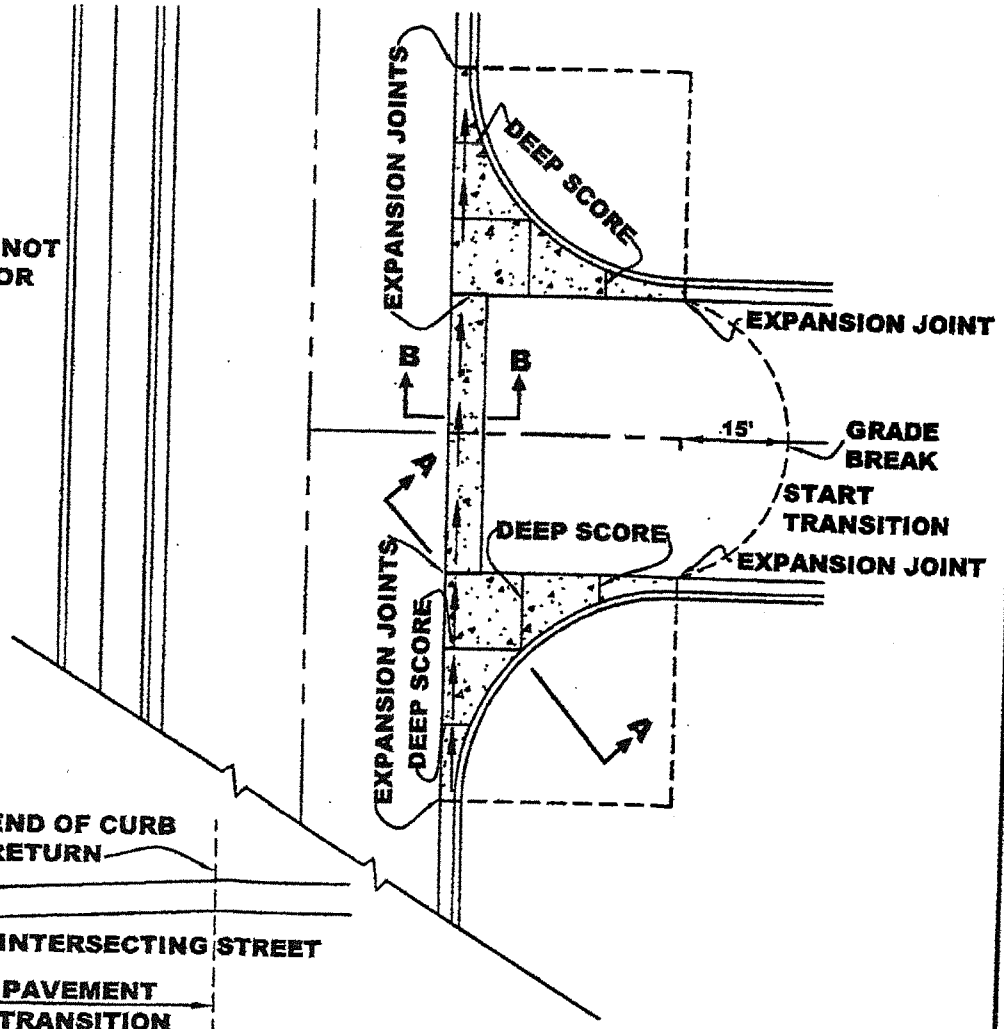

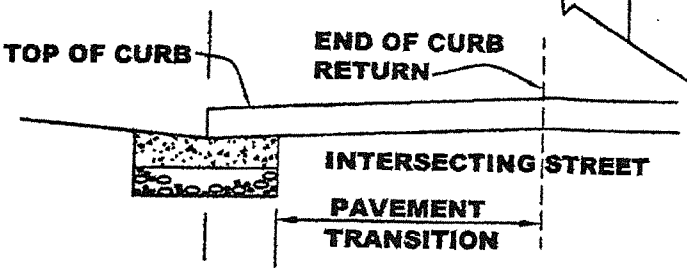

SECTION B-B

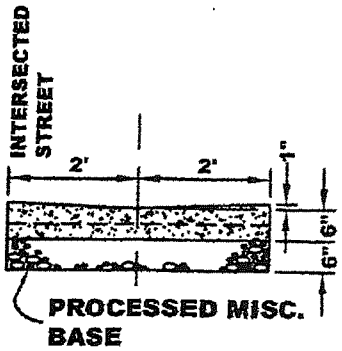

TYPICAL SECTION

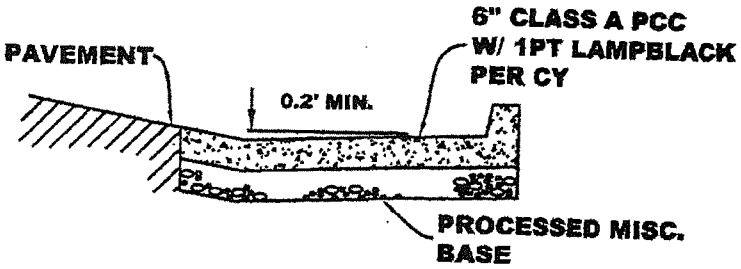

SECTION A-A

VALLEY GUTTER AT STREET INTERSECTION	APPROVED BY:	
	DATE : JUNE 30, 2006	DWG. 16C

2006 STANDARD DETAILS

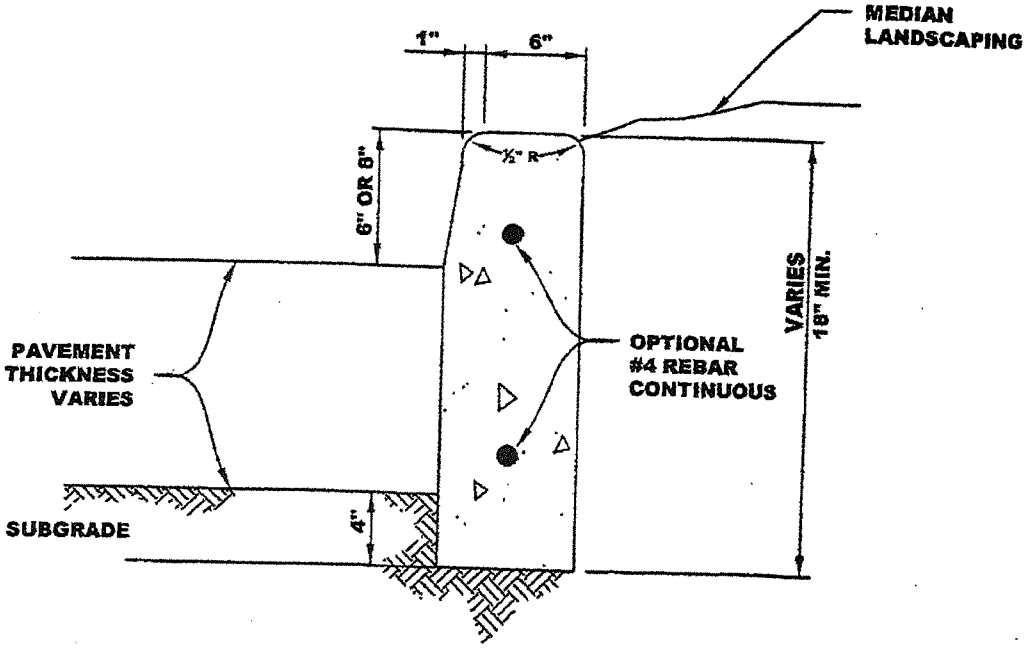

TYPE IV - 6 & IV - 8 DEEP VERTICAL. CURB

APPROVED BY:

DATE : JUNE 30, 2006

DWG. 17C

2006 STANDARD DETAILS

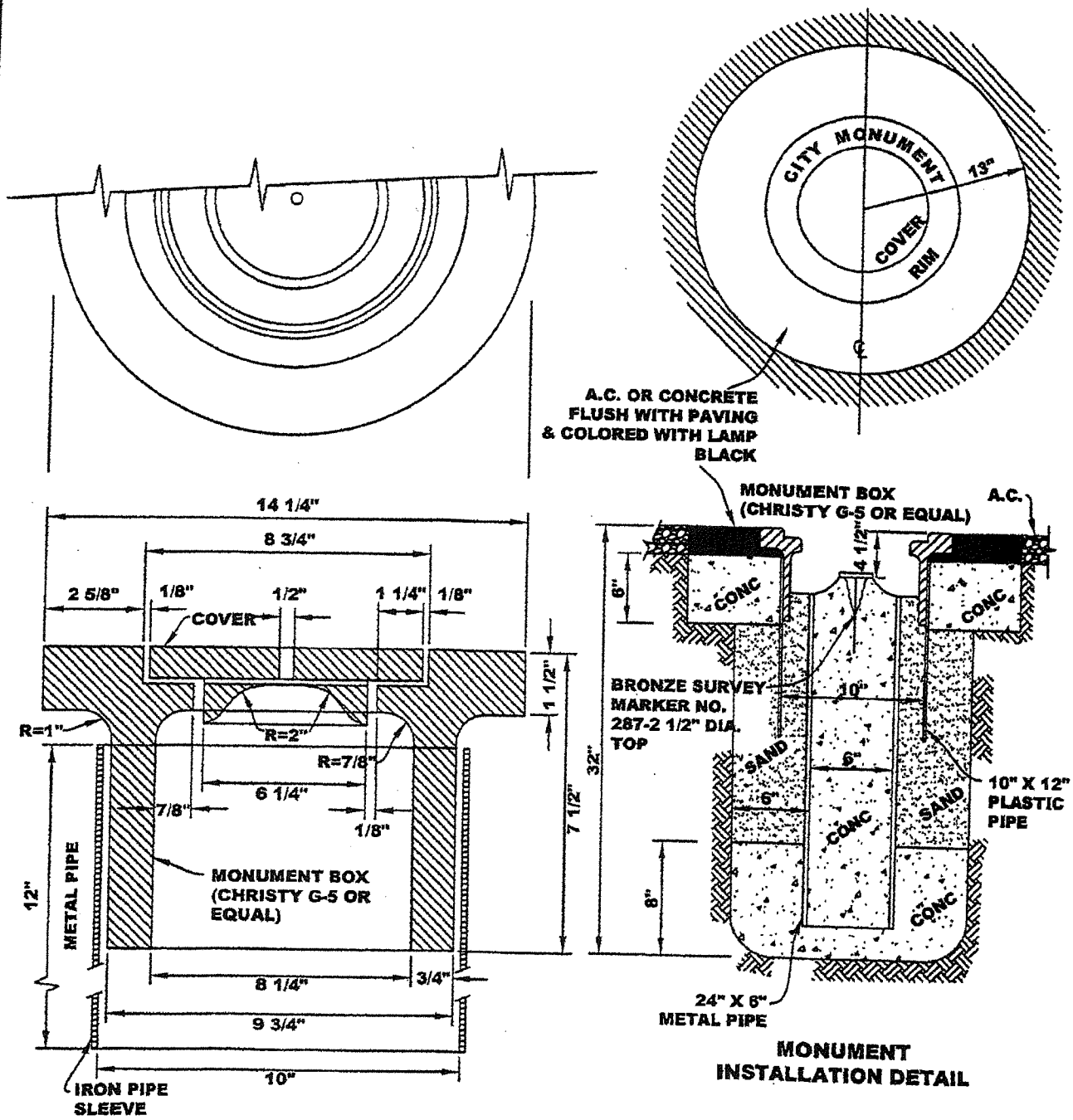

STREET MONUMENT AND MONUMENT BOX		
	DATE : JUNE 30, 2006	APPROVED BY: DWG. 21C

2006 STANDARD DETAILS

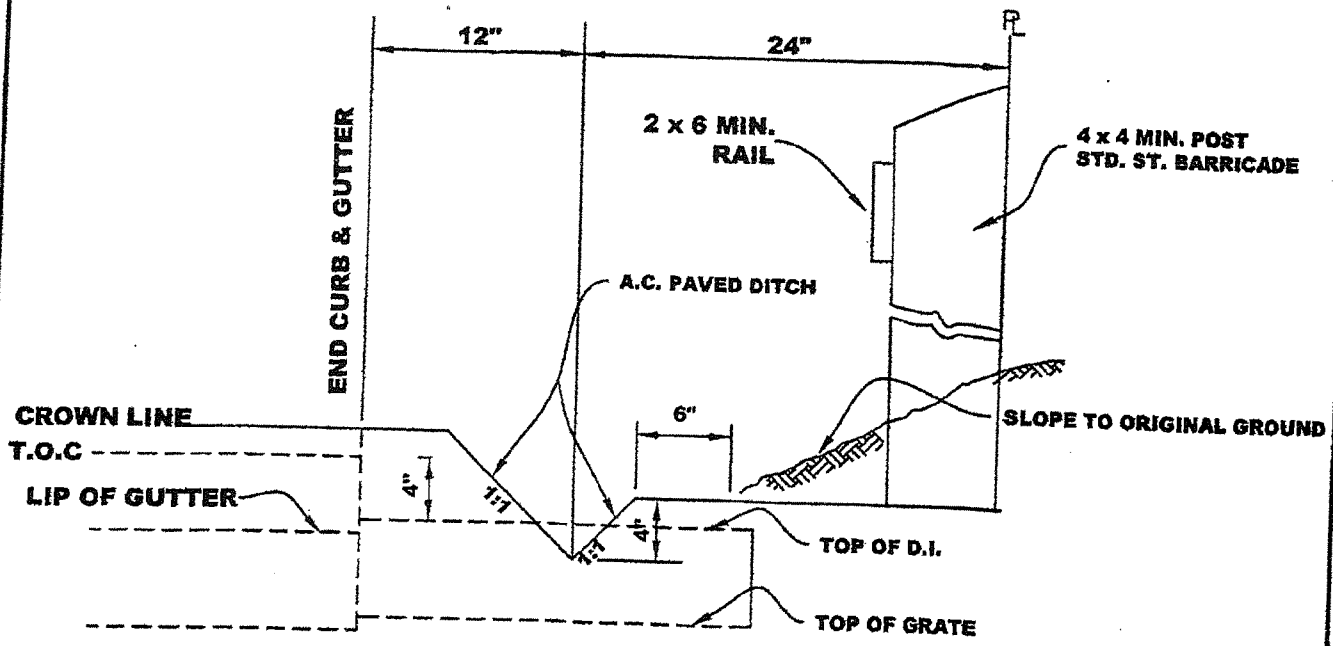

SECTION A - A
NO SCALE

NOTES:

1. END CURB & GUTTER 3' FROM PROPERTY LINE.
2. TOP OF D.I. TO BE 4" BELOW TOP OF CURB GRADE.

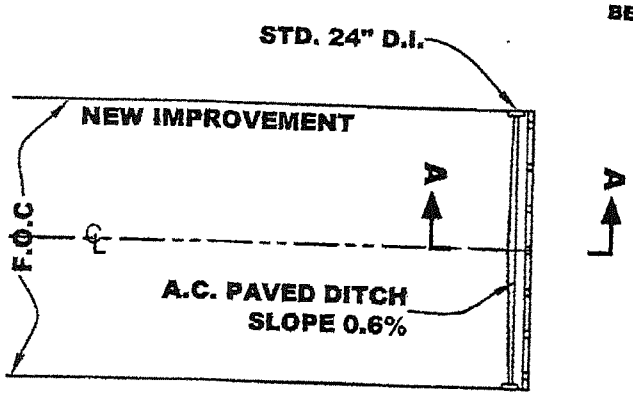

PLAN VIEW

2006 STANDARD DETAILS

TEMPORARY DEAD END STREET		
	APPROVED BY:	
	DATE : JUNE 30, 2006	DWG. 22C

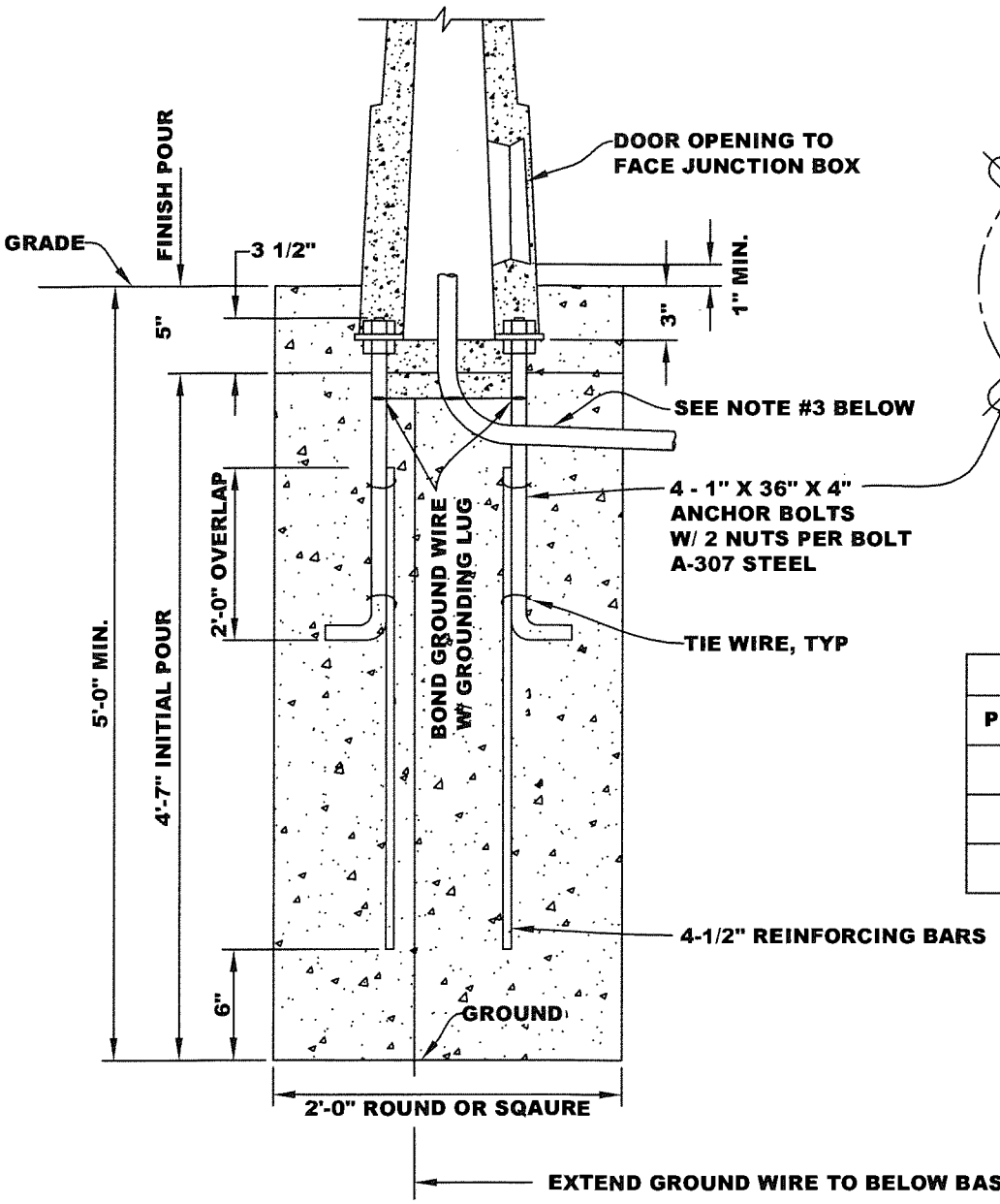

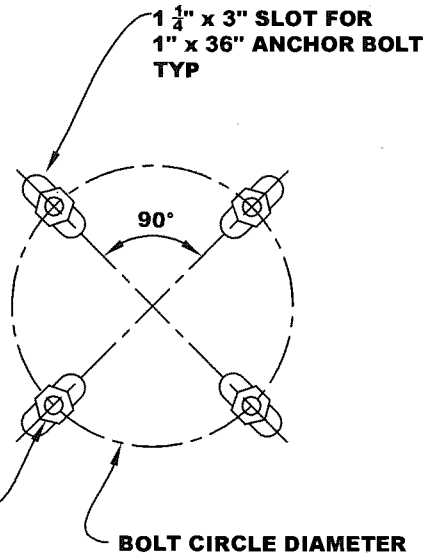

BOLT CIRCLE DIAMETER		
POLE TYPE	MIN.	MAX.
I	12 1/2"	15 1/2"
II	12 1/2"	15 1/2"
III	12 1/2"	15 1/2"

NOTES:

1. FINISH POUR SHALL BE MADE ONLY AFTER ELECTROLIER STANDARD HAS BEEN RAISED AND PLUMBED, LUMINAIRES LEVELED AND ALL WORK INSPECTED.
2. PCC FINISH SHALL BE TO GRADE AND SHALL NOT CREATE TRIPPING HAZARD (IN SIDEWALK AND SOIL INSTALLATIONS).
3. INSTALL 1-1/2" GALVANIZED RIGID CONDUIT AND WRAPPED IN 10-MIL TAPE.

ELECTROLIER FOUNDATION

APPROVED BY:

DATE : JUNE 30, 2006
REVISED : APR 2017

DWG. 1D-1

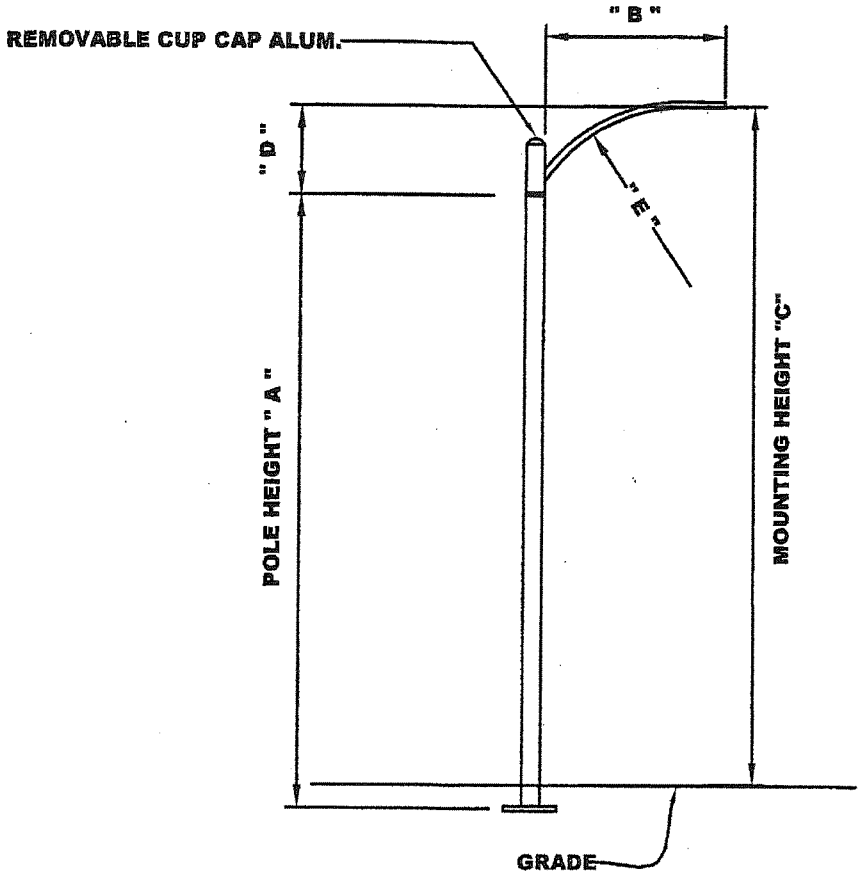

POLE TYPE		A	B	C	D	E
TYPE I	4' ARM	25' - 1"	4' - 0"	26' - 9"	1' - 11"	4' - 8 1/2"
	6' ARM	25' - 1"	6' - 0"	27' - 6"	2' - 8"	7' - 6 1/4"
	8' ARM	25' - 1"	8' - 0"	28' - 4"	3' - 6"	10' - 6"
TYPE II	4' ARM	26' - 7"	4' - 0"	28' - 3"	1' - 11"	4' - 8 1/2"
	6' ARM	26' - 7"	6' - 0"	29' - 0"	2' - 8"	7' - 6 1/4"
	8' ARM	26' - 7"	8' - 0"	29' - 10"	3' - 6"	10' - 6"
TYPE III	4' ARM	30' - 0"	4' - 0"	31' - 9"	1' - 11"	4' - 8 1/2"
	6' ARM	30' - 0"	6' - 0"	32' - 5"	2' - 8"	7' - 6 1/4"
	8' ARM	30' - 0"	8' - 0"	33' - 3"	3' - 6"	10' - 6"

ELECTROILER POLES

Marvin A. Roe
APPROVED BY:

DATE : JUNE 30, 2006
REVISED : JUNE, 2007

DWG. 1D-2

2006 STANDARD DETAILS

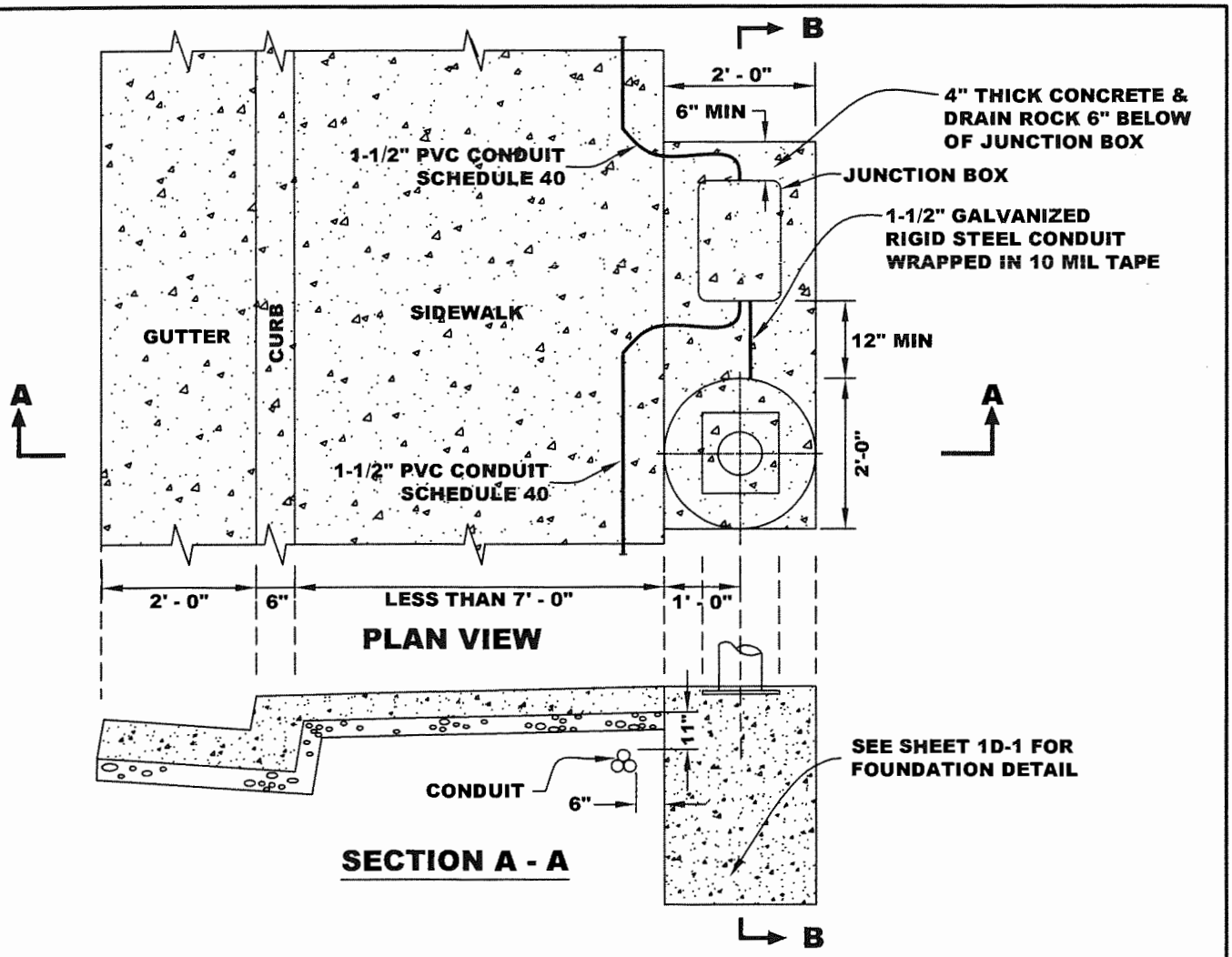

NOTE: FOR CONDUITS UNDER ROADWAY, USE PVC CONDUIT SCHEDULE 80.

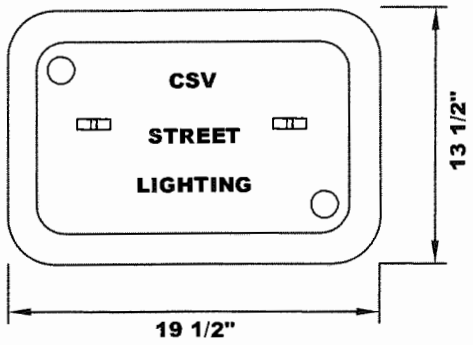

JUNCTION BOX
STATE OF CALIF. STD. #3 1/2

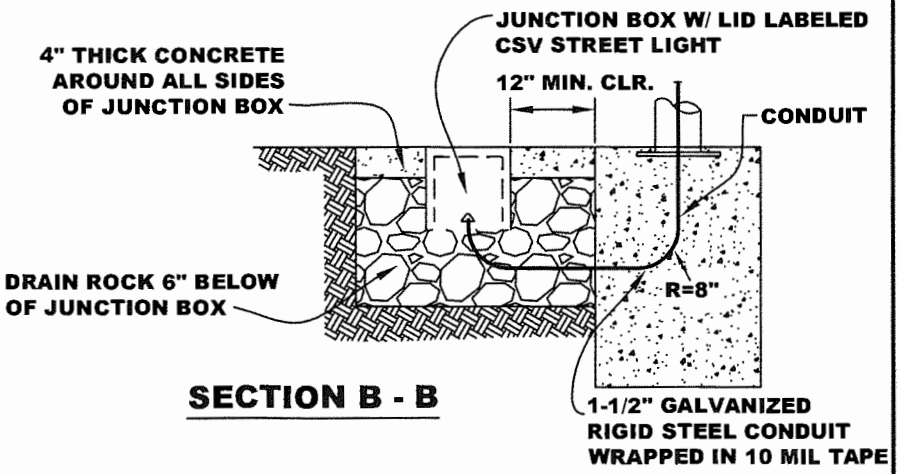

NOTES:

1. FOR LOCATIONS WITH WIDER MONOLITHIC SIDEWALKS AND NON-MONOLITHIC SIDEWALKS, SEE STANDARD DETAIL 2D-2 AND 2D-3.
2. IF THERE IS NO SIDEWALK, LOCATE IN ACCORDANCE WITH THIS STANDARD DETAIL WITH THE FOUNDATION CENTERED 6' - 6" FROM FACE OF CURB.

ELECTROLIER AND CONDUIT INSTALLATION - SHEET 1 OF 3	APPROVED BY:	
	DATE : JUNE 30, 2006 REVISED: : APR 2017	DWG. **2D-1**

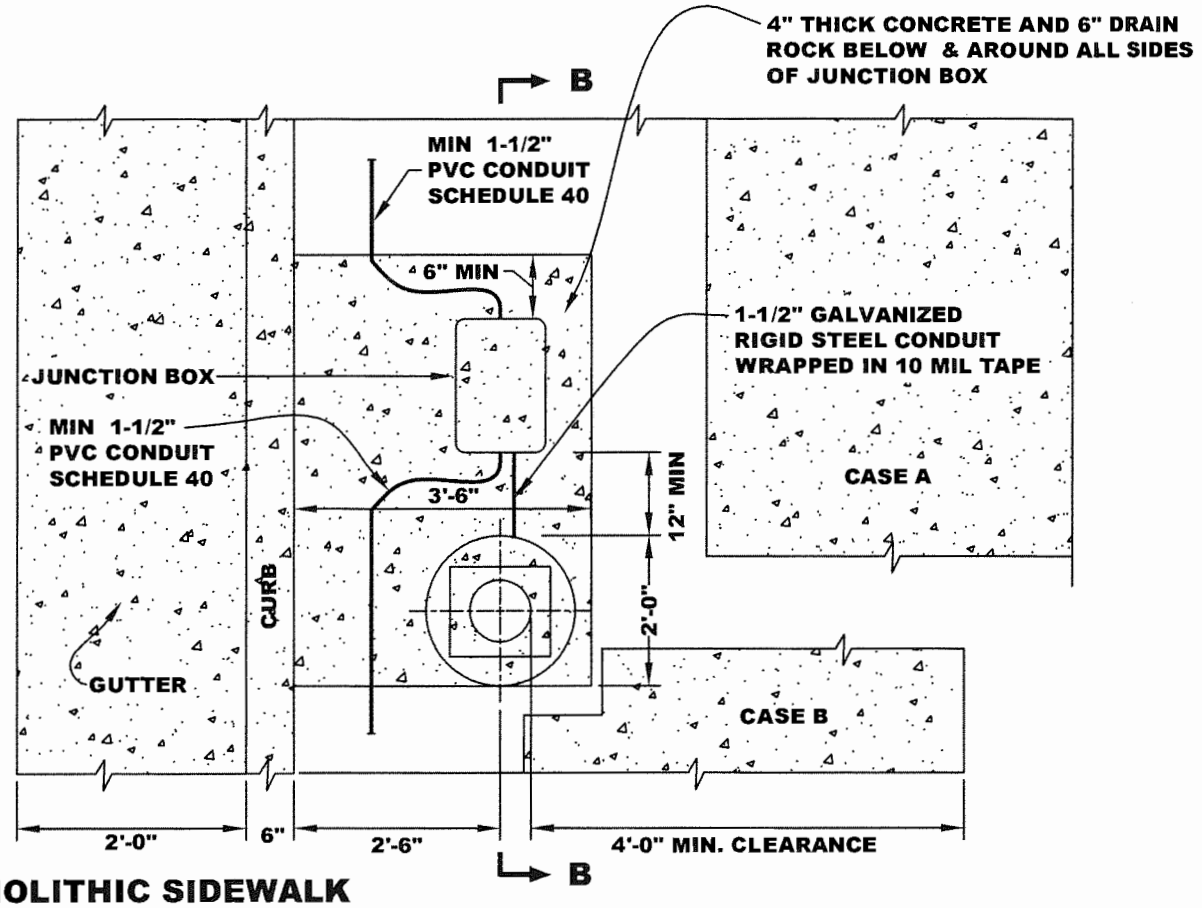

NON-MONOLITHIC SIDEWALK

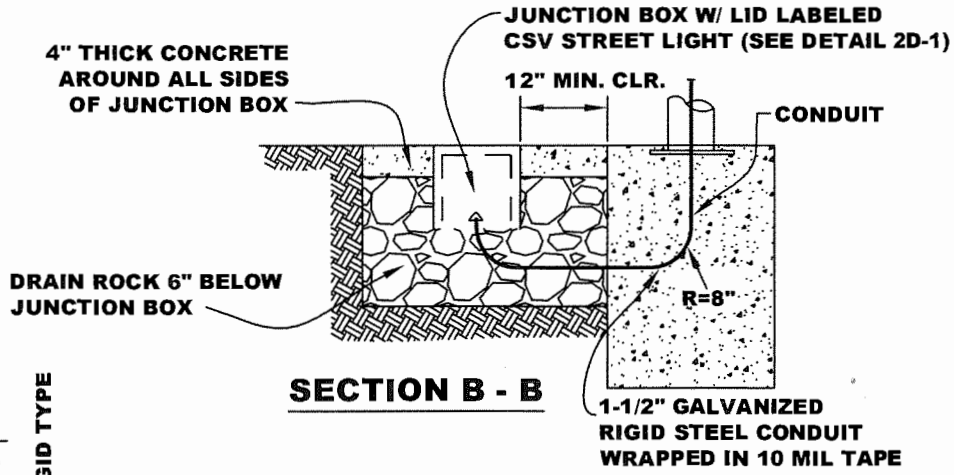

SECTION B - B

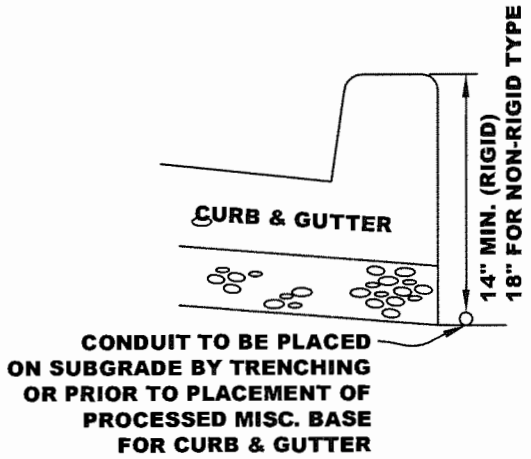

NOTES:

1. FOR NON-MONOLITHIC SIDEWALK.
   CASE A: APPLIES IF FRONT OF SIDEWALK IS AT LEAST 4'-0" FROM FACE OF CURB.
   CASE B: APPLIES IF FRONT OF SIDEWALK IS LESS THAN 4'-0" FROM FACE OF CURB, AND THERE IS A MINIMUM OF 4'-0" CLEAR SIDEWALK BETWEEN POLE AND BACK OF SIDEWALK. IF THIS 4'-0" MINIMUM CLEAR SIDEWALK CANNOT BE ACHIEVED, STANDARD DETAIL 2D-1 SHALL BE USED (i.e., INSTALL ELECTROLIER BEHIND THE SIDEWALK).
2. FOR MONOLITHIC SIDEWALKS: SEE DETAIL 2D-3.

ELECTROLIER AND CONDUIT INSTALLATION - SHEET 2 OF 3	APPROVED BY:	
	DATE : JUNE 30, 2006 REVISED : APR 2017	DWG. 2D-2

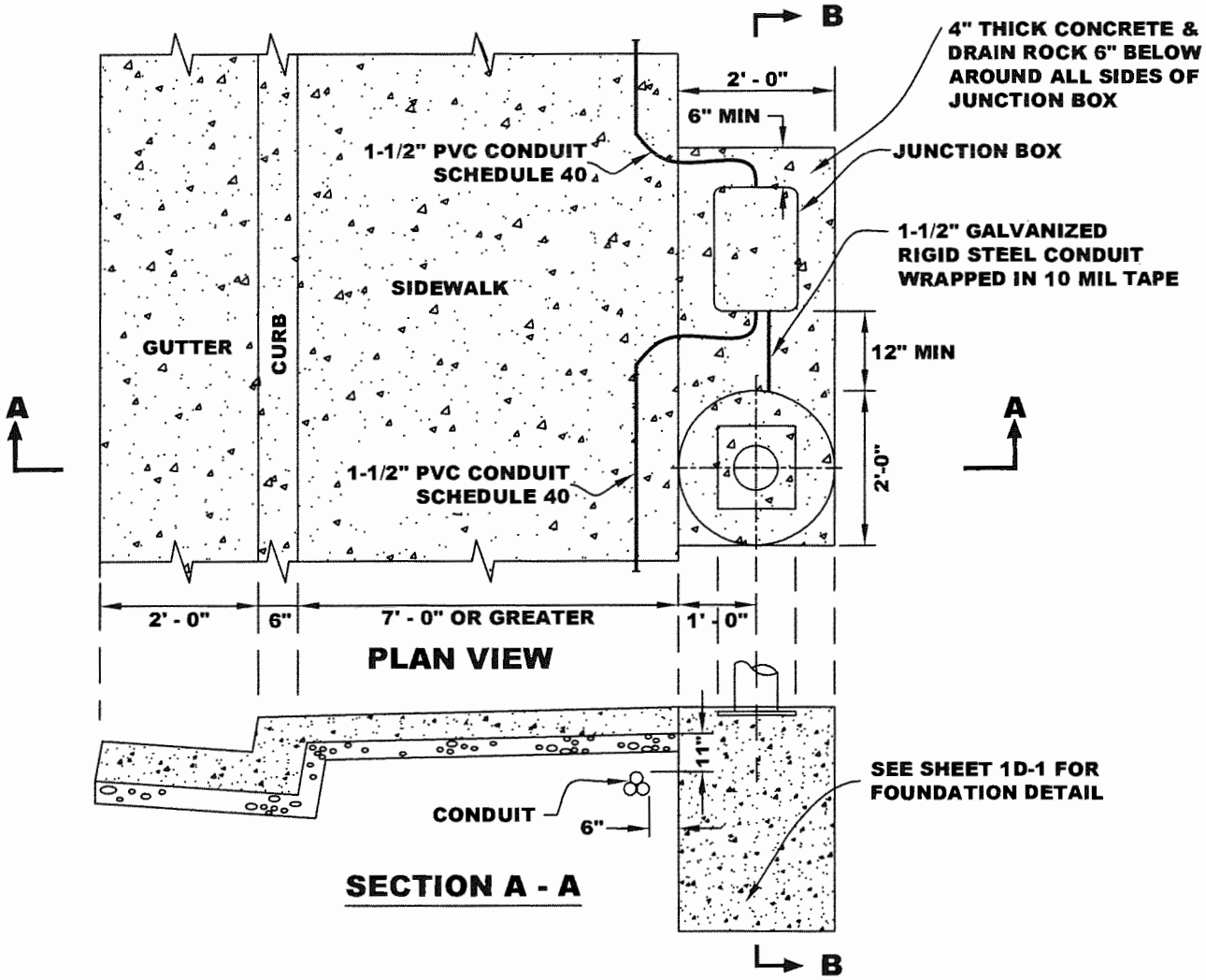

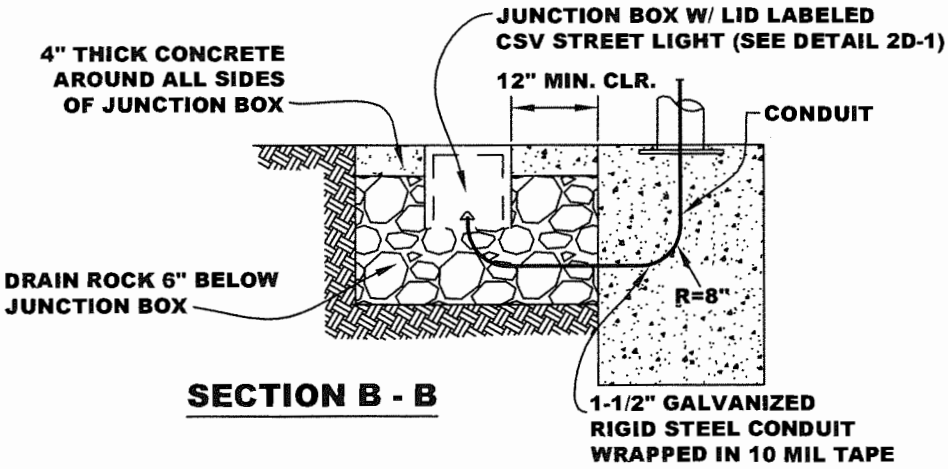

NOTES:

FOR NON-MONOLITHIC SIDEWALK: SEE DETAIL 2D-2.

ELECTROLIER AND CONDUIT INSTALLATION - SHEET 3 OF 3	APPROVED BY:	
	DATE : JUNE 30, 2006 REVISED : APR 2017	DWG. 2D-3

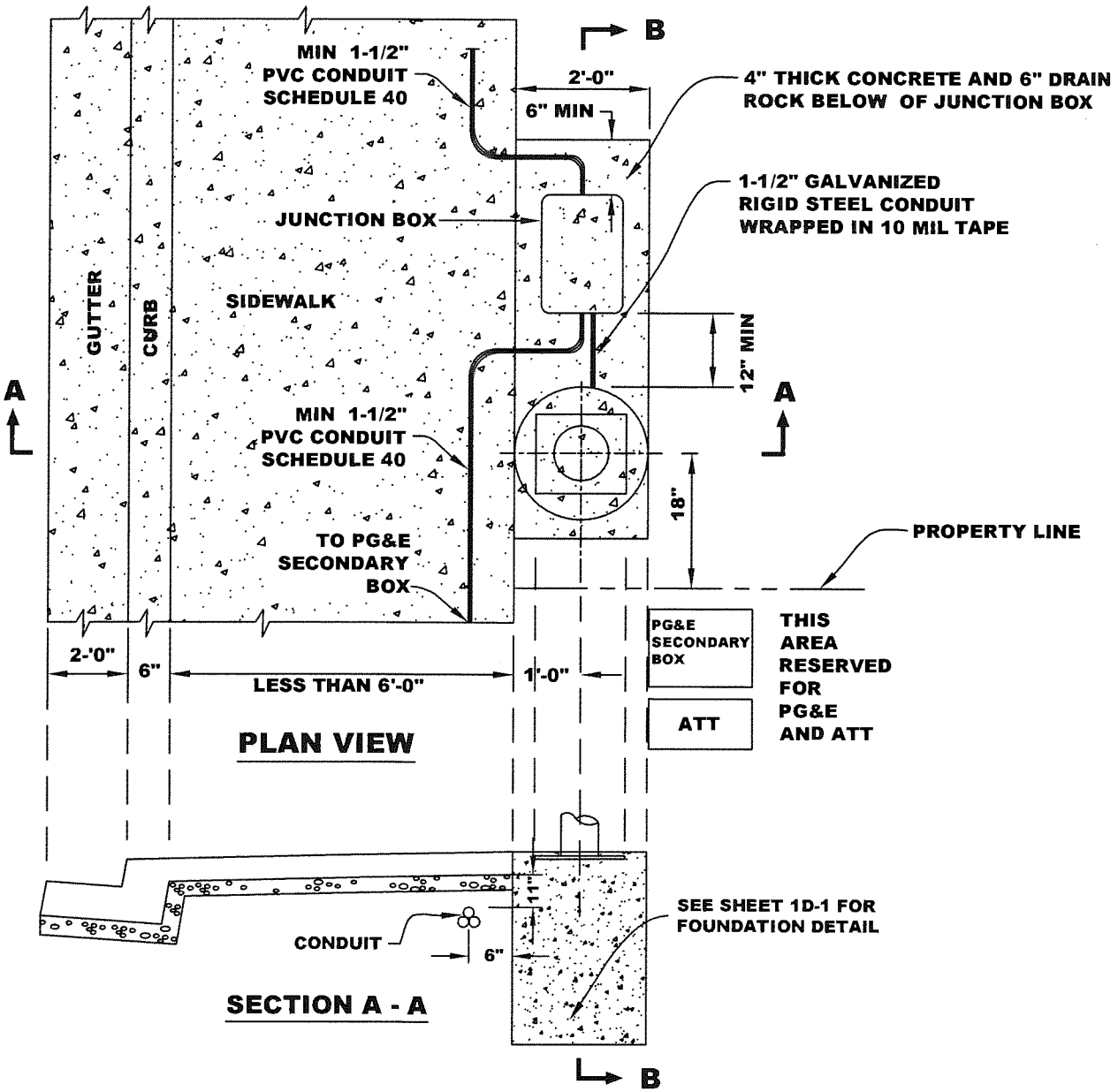

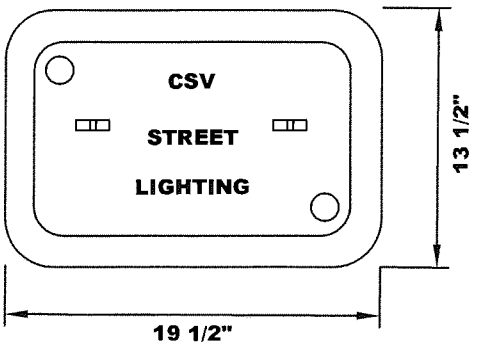

JUNCTION BOX
STATE OF CALIF. STD. #3 1/2

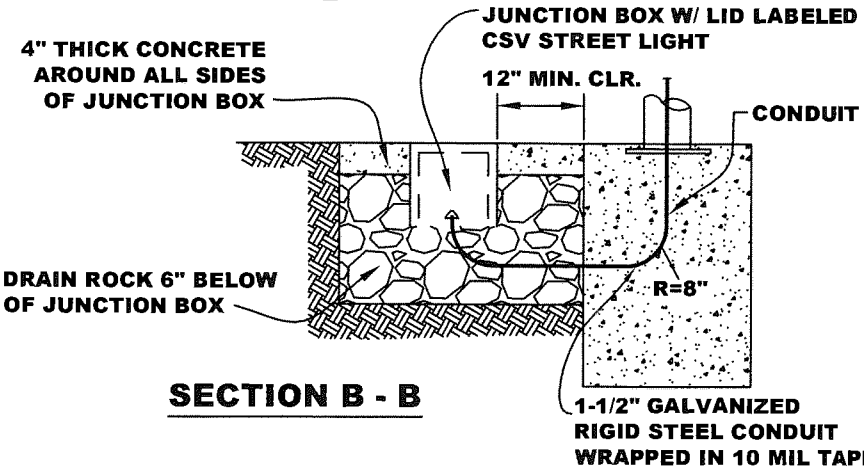

ELECTROLIER AND CONDUIT LOCATION

(SUBDIVISIONS SERVED BY UNDERGROUND PG&E POWER DISTRIBUTION SYSTEM)

APPROVED BY:

DATE : JUNE 30, 2006
REVISED : APR 2017

DWG. 3D

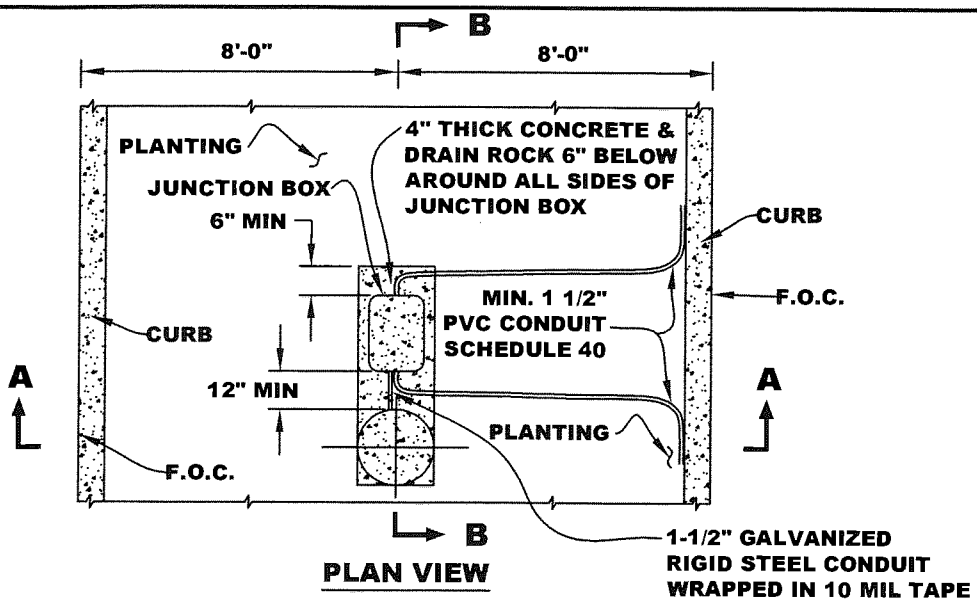

PLAN VIEW

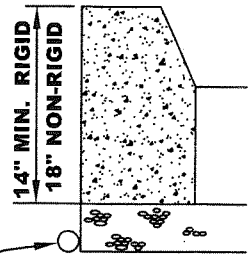

CONDUIT TO BE PLACED ON SUBGRADE BY TRENCHING OR PRIOR TO PLACEMENT OF AGGREGATE BASE MATERIAL FOR CURB & GUTTER

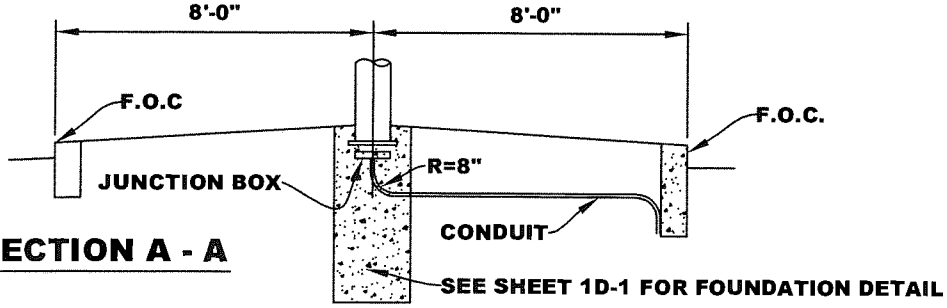

SECTION A - A

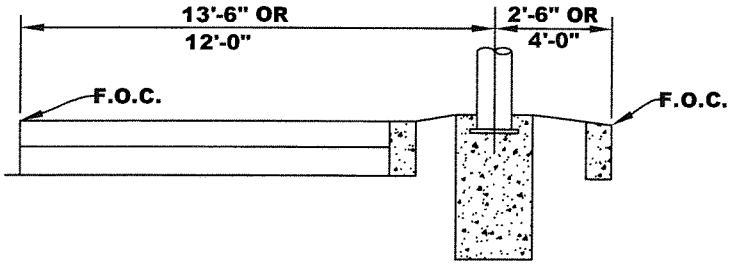

F.O.C. TO & ELECT.	2'-6"	4'-0"	8'-0"	12'-0"	13'-6"
ARM LENGTH	4'	4'	8'	8'	8'

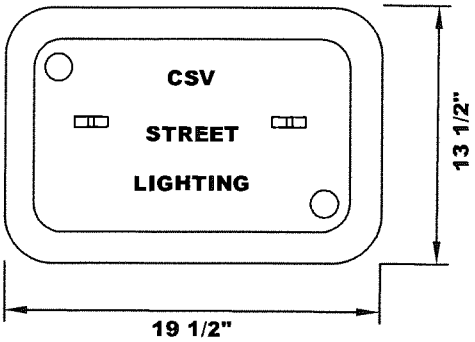

JUNCTION BOX
STATE OF CALIF. STD. #3 1/2

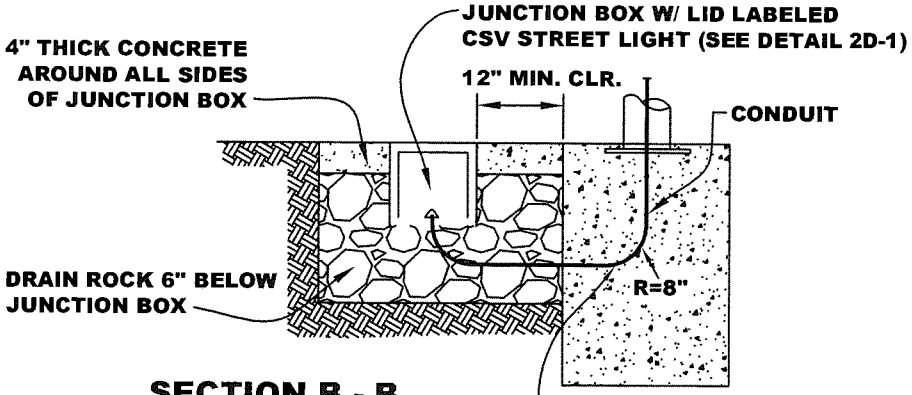

SECTION B - B

ELECTROLIER AND CONDUIT LOCATION IN MEDIAN ISLANDS

APPROVED BY:

DATE : JUNE 30, 2006
REVISED : APR 2017

DWG. 5D

LEGEND:

= FIRE HYDRANT ▪ = BLUE PAVEMENT MARKER

FIGURE 1
TWO LANE STREET

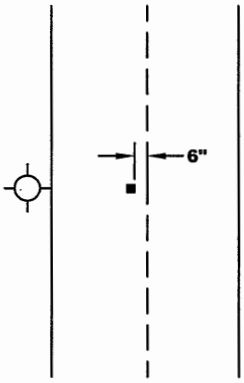

FIGURE 2
MULTI - LANE STREET

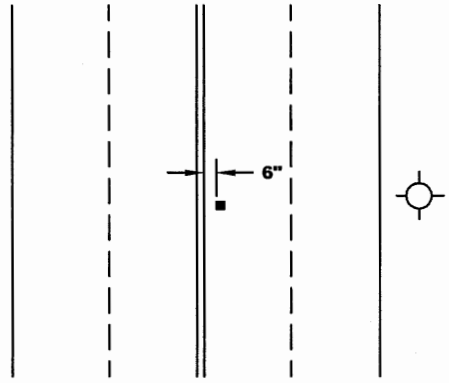

FIGURE 3
AN INTERSECTION

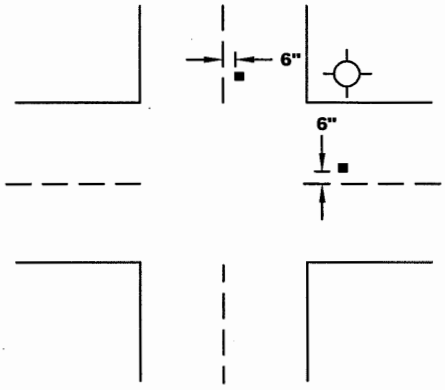

FIGURE 4
FOUR LANE STREET WITH TURN LANE AT INTERSECTION

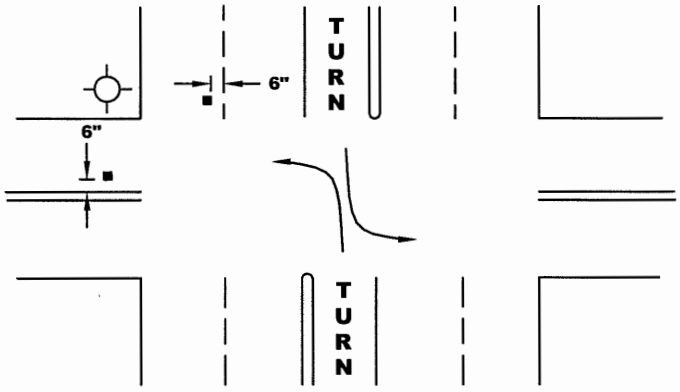

FIGURE 5
MULTI - LANE STREET WITH TURN LANE

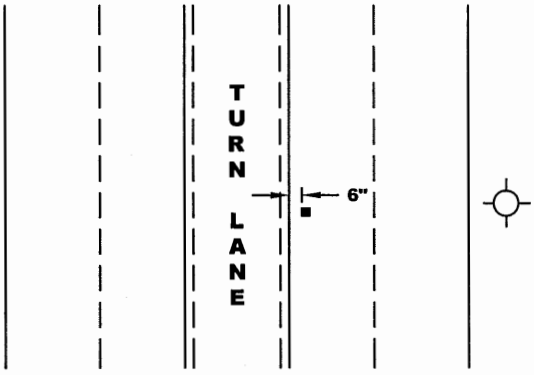

FIGURE 6
FREEWAYS AND EXPRESSWAYS

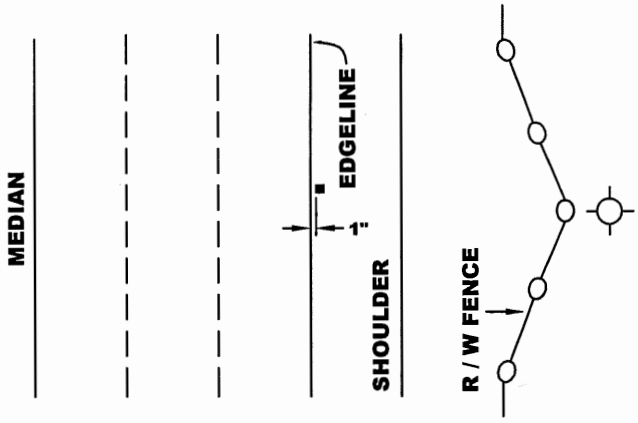

TYPICAL HYDRANT MARKER LOCATION

APPROVED BY:

DATE : JUNE 30, 2006

DWG. 2E-1

2006 STANDARD DETAILS

TYPICAL ROAD LANE CLOSURE

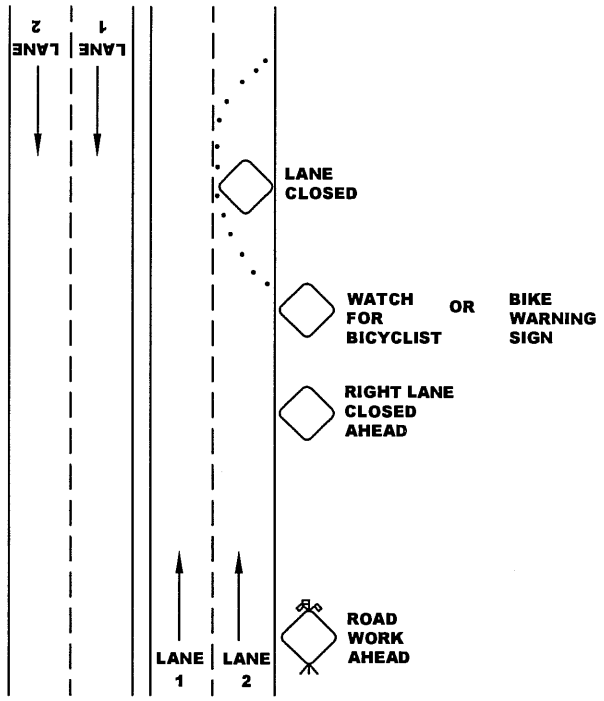

TYPICAL BIKE LANE CLOSURE

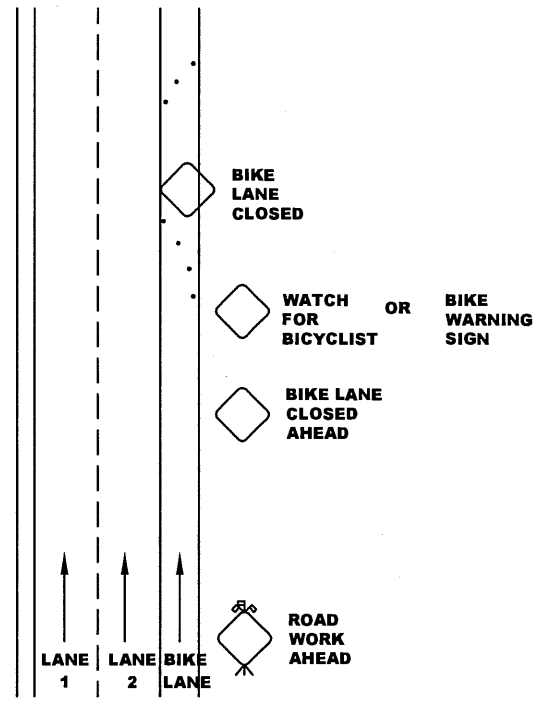

TYPICAL RIGHT LANE CLOSURE WITH BIKE LANE

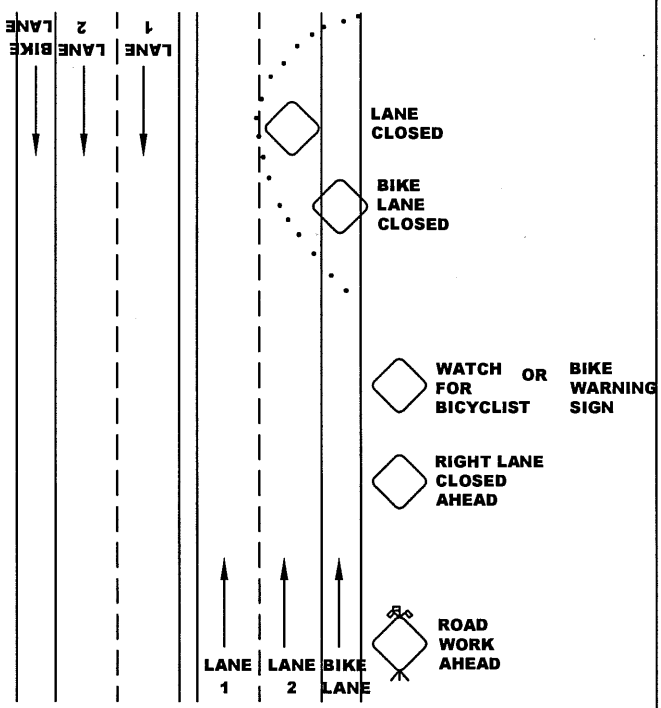

TYPICAL SHOULDER CLOSURE

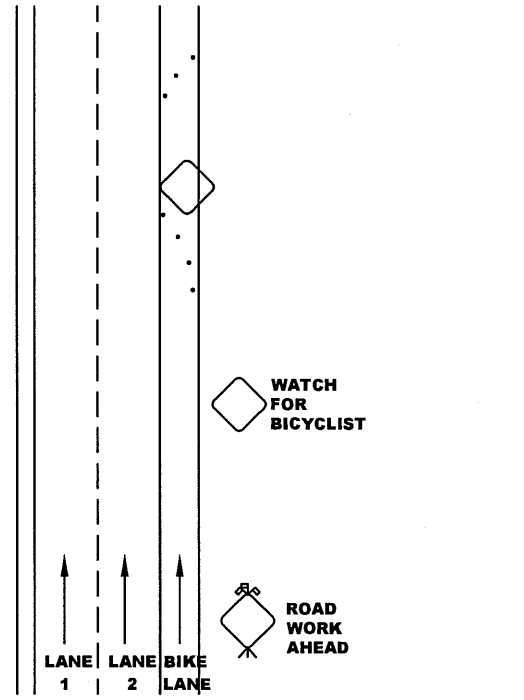

SOP FOR RIGHT LANE AND BIKE LANE CLOSURES

APPROVED BY:

DATE : JUNE 30, 2006

DWG. 3E-2

2006 STANDARD DETAILS

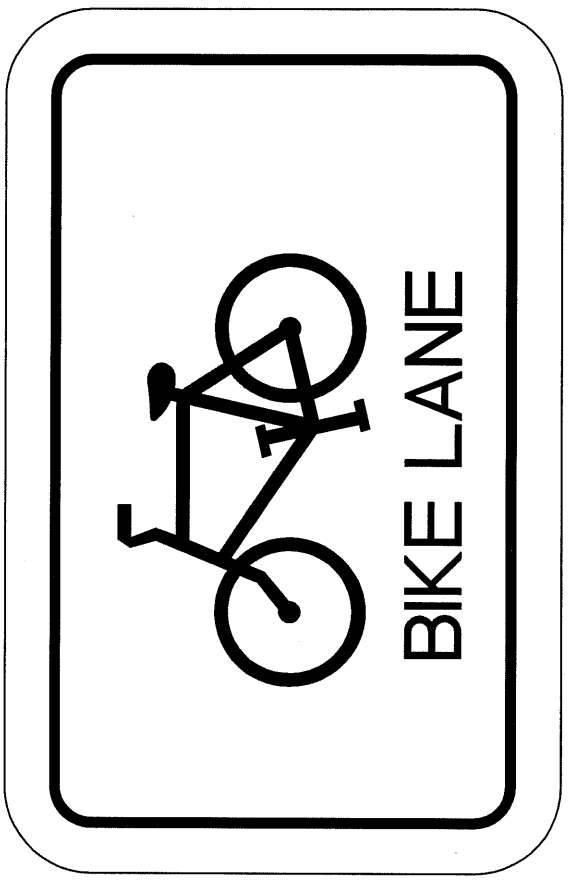

FRONT

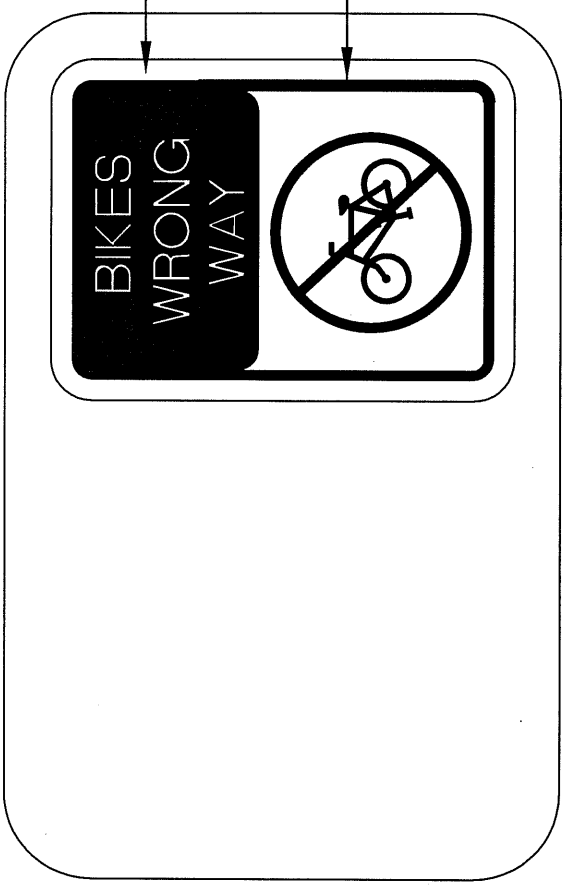

BACK

R81 SIGN DETAIL	APPROVED BY:	
	DATE : JUNE 30, 2006 REVISED : SEPT 2007	DWG. 4E-1

COMBINATION R26/R81 SIGN

FRONT **BACK**

DATE : JUNE 30, 2006

DWG. 4E-2

APPROVED BY:

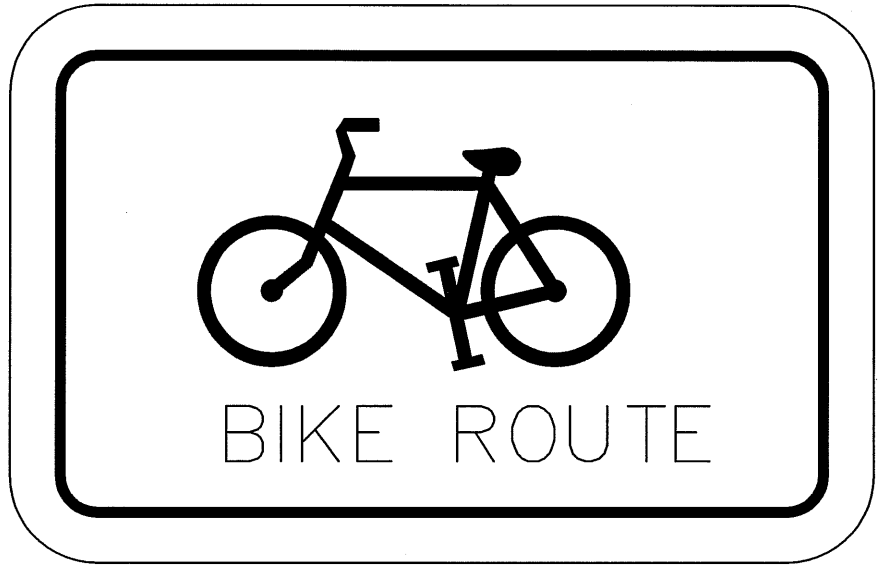

FRONT

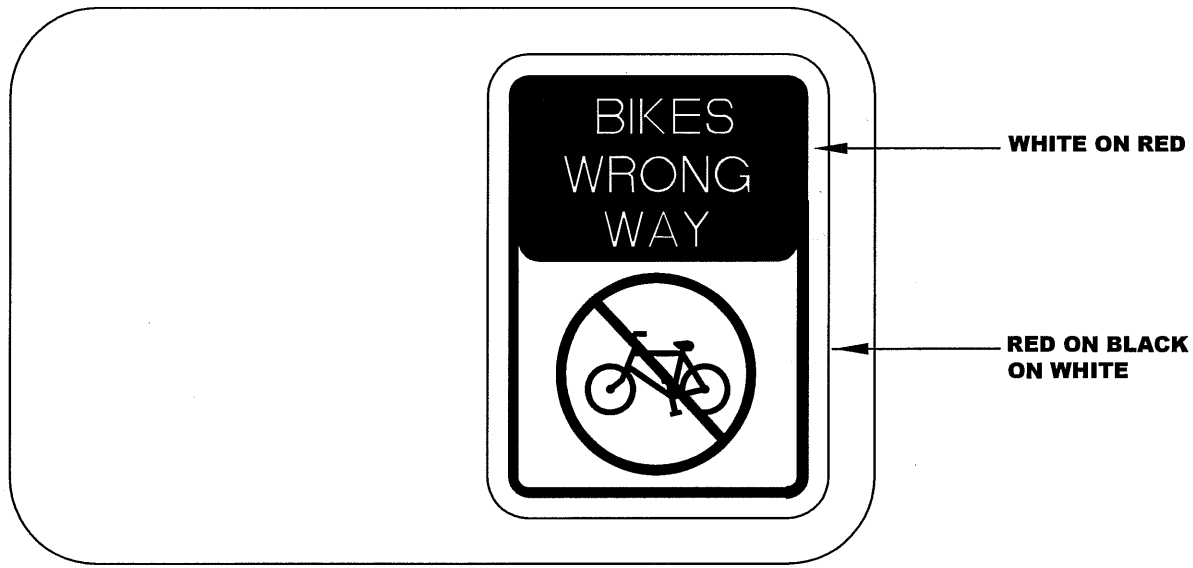

BACK

G93 SIGN DETAIL

DATE : JUNE 30, 2006

DWG. 4E-3

APPROVED BY:

COMBINATION R26/G93 SIGN

DATE : JUNE 30, 2006

APPROVED BY:

DWG. 4E-4

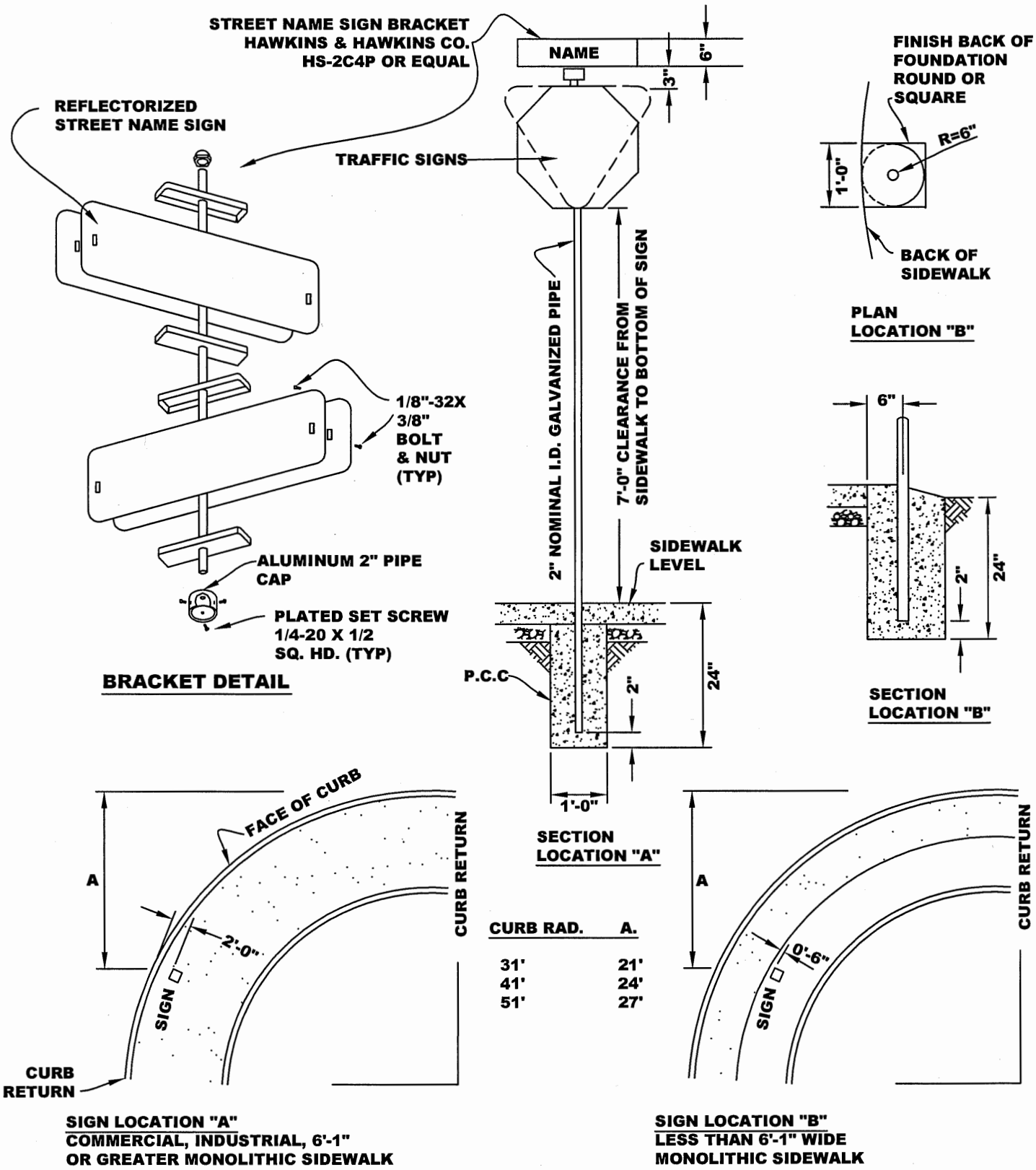

CURB RAD.	A.
31'	21'
41'	24'
51'	27'

SIGN LOCATION "A"
COMMERCIAL, INDUSTRIAL, 6'-1"
OR GREATER MONOLITHIC SIDEWALK

SIGN LOCATION "B"
LESS THAN 6'-1" WIDE
MONOLITHIC SIDEWALK

SIGNS: PRIVATE = WHITE ON BLUE
CITY = WHITE ON GREEN

LETTERING: STREET NAME - 4" "B" SERIES (USDOT FHWA STD.).
FOR STREET TYPE (e.g. "AVE", "ROAD", ETC.) USE 2" SERIES.

STREET NAME SIGNS

APPROVED BY:

DATE : MAY 15, 2006
REV. DATE:

DWG. 5E

2006 STANDARD DETAILS

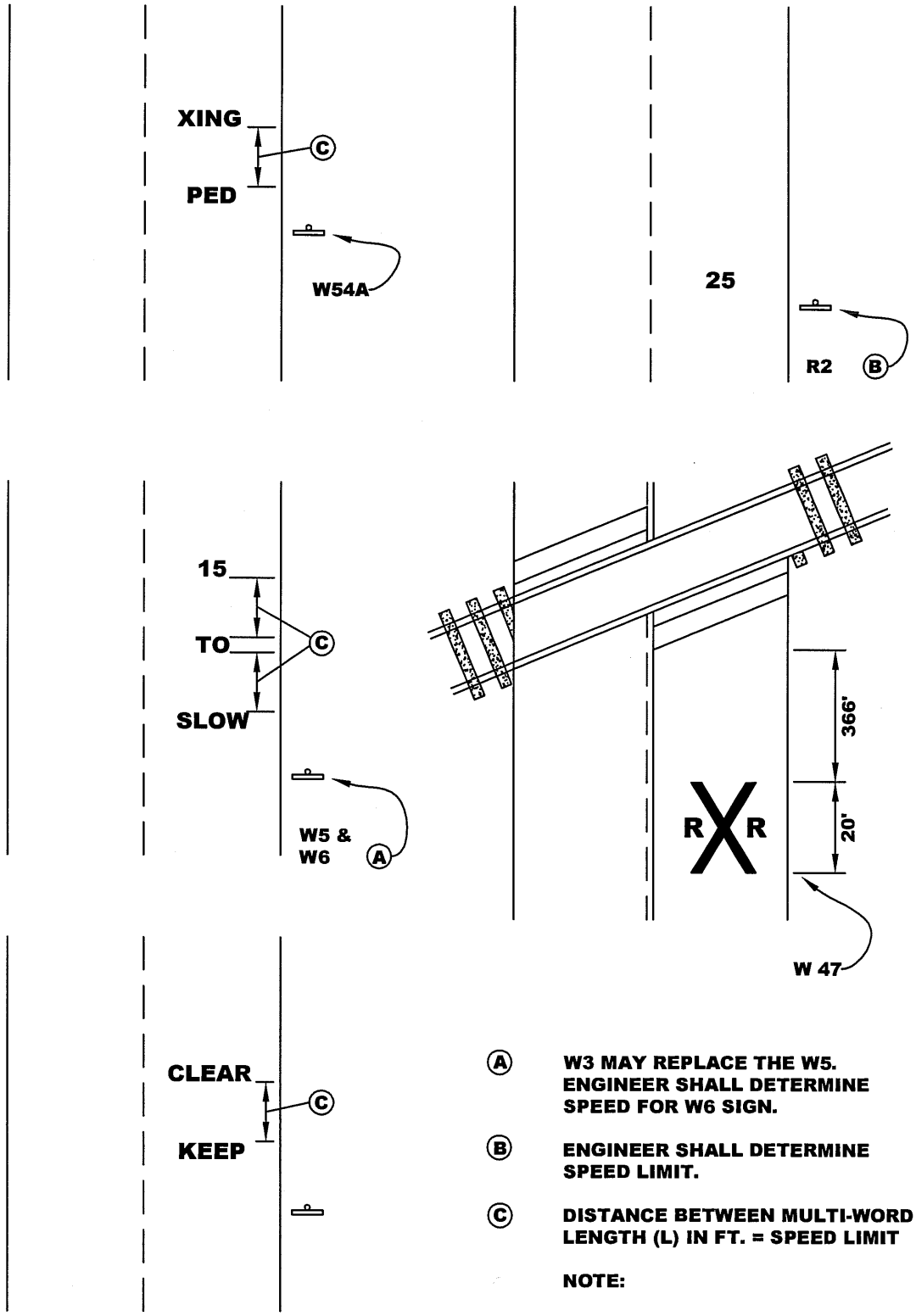

(A) W3 MAY REPLACE THE W5. ENGINEER SHALL DETERMINE SPEED FOR W6 SIGN.

(B) ENGINEER SHALL DETERMINE SPEED LIMIT.

(C) DISTANCE BETWEEN MULTI-WORD LEGENDS LENGTH (L) IN FT. = SPEED LIMIT

NOTE:

SEE CALTRANS TRAFFIC MANUAL FOR SIGN TYPES AND LETTERING SIZE.

PAVEMENT LEGENDS: SPEED ADVISORY

APPROVED BY:

DATE : MAY 19, 2006
REV. DATE:

DWG. 8E

2006 STANDARD DETAILS

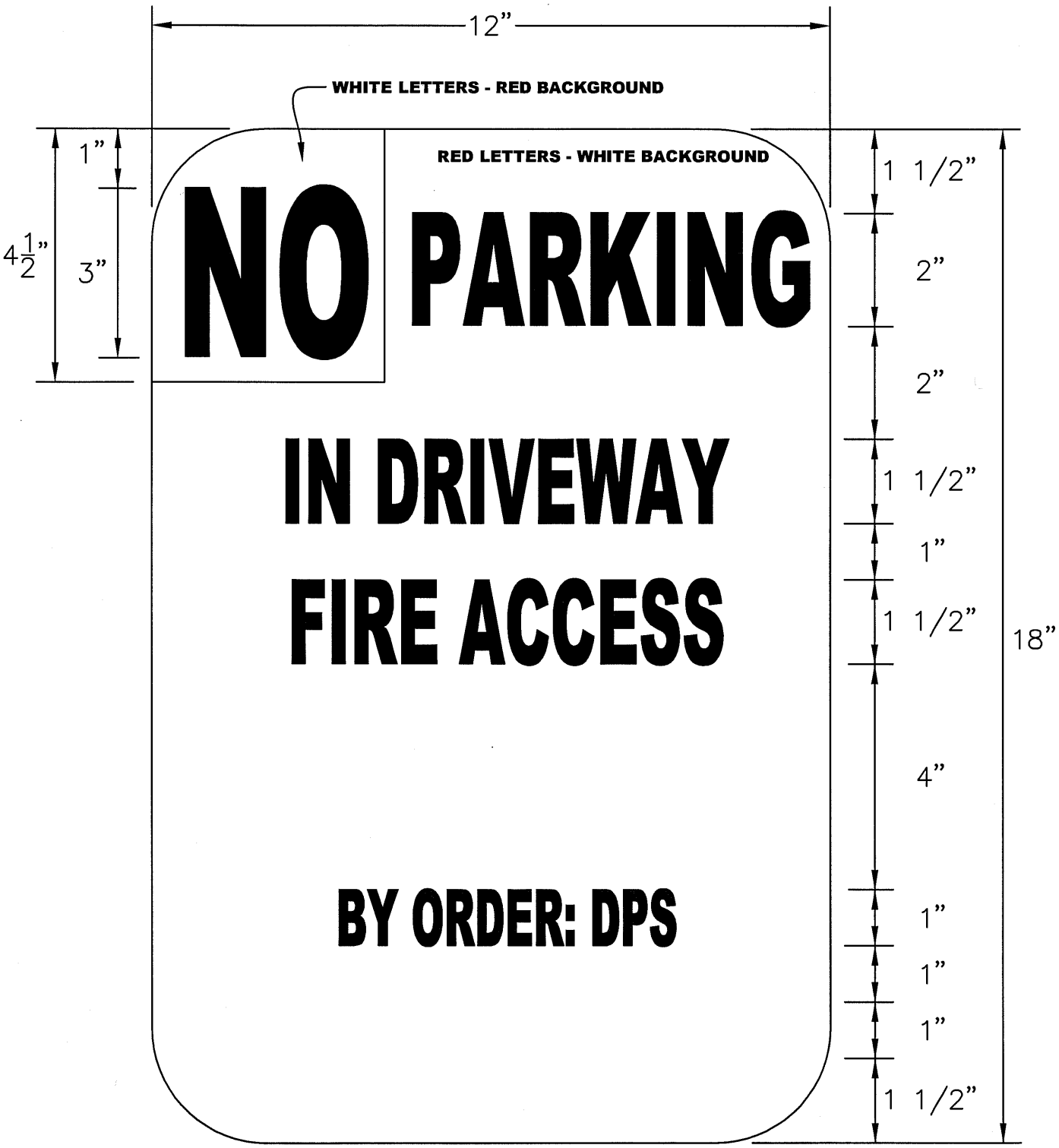

FIRE ACCESS,
NO PARKING IN DRIVEWAY

APPROVED BY:

DATE : JUNE 30, 2006

DWG. 11E

2006 STANDARD DETAILS

[PROJECT TITLE]

A PROJECT OF

DEPARTMENTS OF PUBLIC WORKS AND XXX

Sunnyvale

CITY OF SUNNYVALE
City Council & Manager

XXXX, Mayor
XXXX
XXXX
XXXX

XXXX, Vice-Mayor
XXXX
XXXX
XXXX, City Manager

SCOPE OF WORK:
[DESCRIPTION XXXX]

Scheduled Completion: XXXX

For information: Call XXXX

SAMPLE TEXT - EXACT TEXT TO BE PROVIDED BY CITY

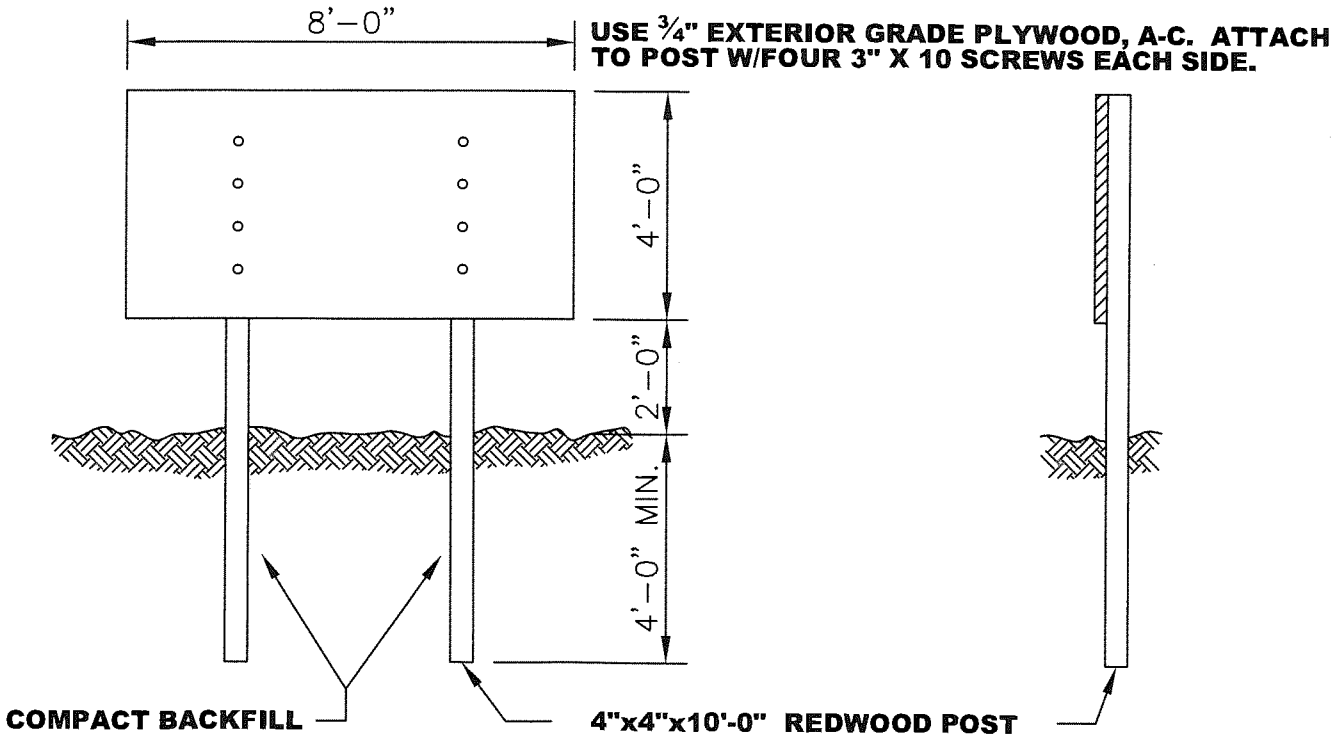

PROJECT INFORMATION SIGN

Sunnyvale

APPROVED BY:

DATE : JUN 30, 2006
REVISED : AUGUST 9, 2017

DWG. 1G

2006 STANDARD DETAILS

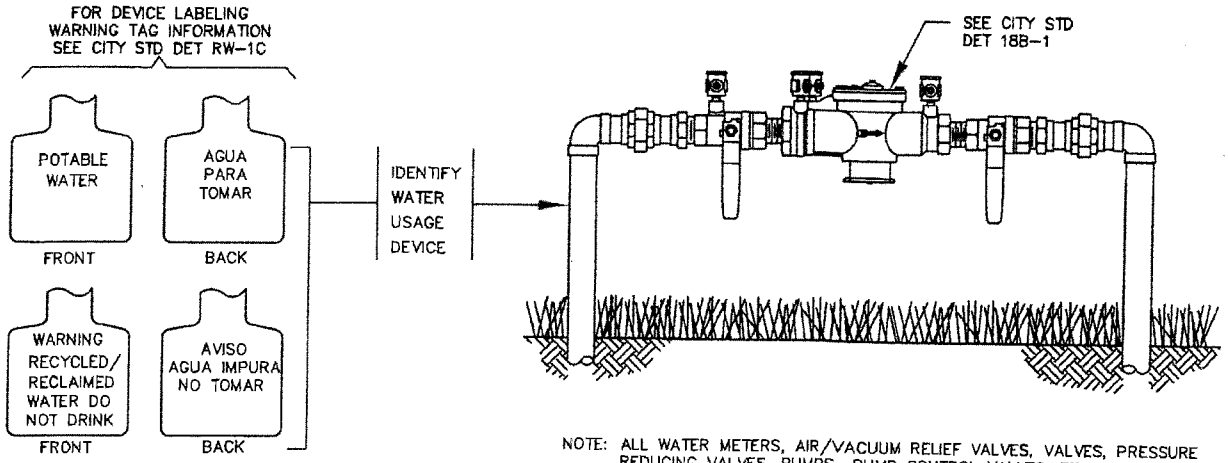

NOTE: ALL WATER METERS, AIR/VACUUM RELIEF VALVES, VALVES, PRESSURE REDUCING VALVES, PUMPS, PUMP CONTROL VALVES, ETC., SHALL BE TAGGED OR LABELED INDICATING WHETHER THE DEVICES ARE ON RECYCLED WATER OR POTABLE WATER SYSTEM.

WATER CONTROL DEVICE DETAIL

NOT TO SCALE

IRRIGATION VALVE BOX NOTES:

1. FOR NEW INSTALLATIONS, INSTALL CARSON PURPLE IRRIGATION VALVE BOXES (OR EQUAL) THAT ARE USED FOR RECYCLED WATER APPLICATIONS. BOXES SHALL BE IMPRINTED WITH THE INFORMATION THAT IS SHOWN ON THE VALVE BOX NAMEPLATE. SEE RIGHT --->

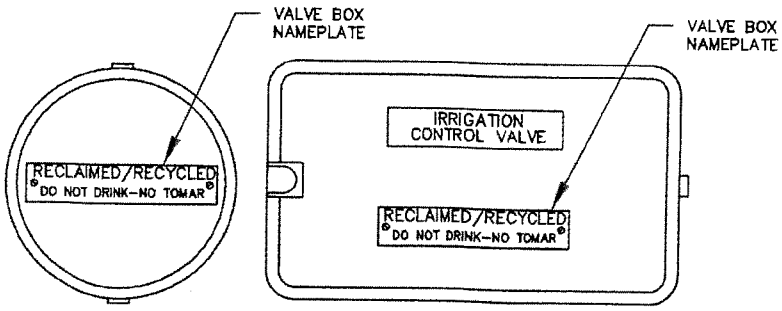

VALVE BOX NAMEPLATE INFO: T. CHRISTY ENTERPRISES, INC. CATALOG P/S: 3800 (OR APPROVED EQUAL).

IRRIGATION BOX COVERS/LIDS DETAIL

NOT TO SCALE

RECYCLED WATER LABELS - 1	APPROVED BY:	
	DATE : DEC 2014 REVISED : -	DWG. **RW-1A**

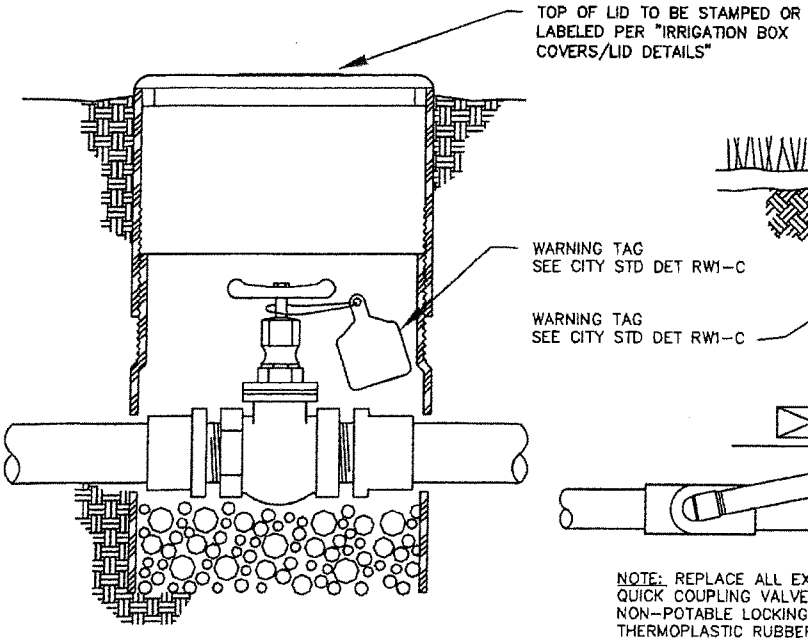

GATE VALVE DETAIL

NOT TO SCALE

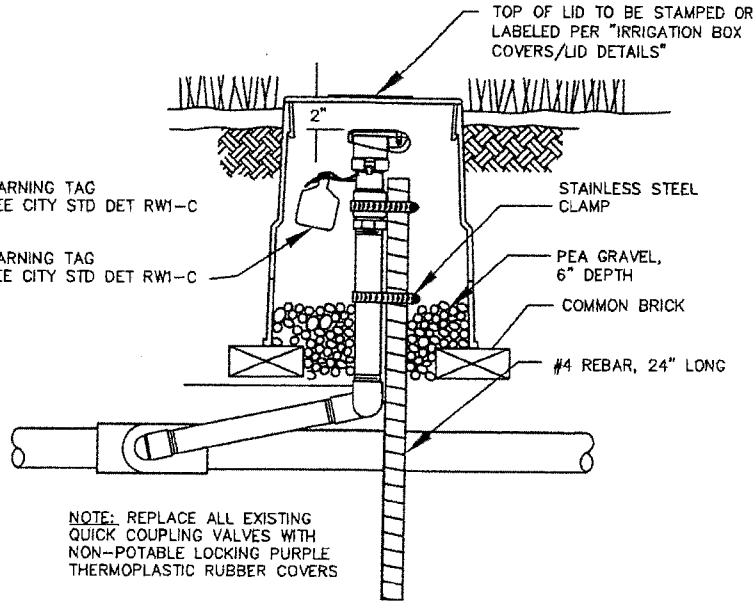

QUICK COUPLING VALVE DETAIL

NOT TO SCALE

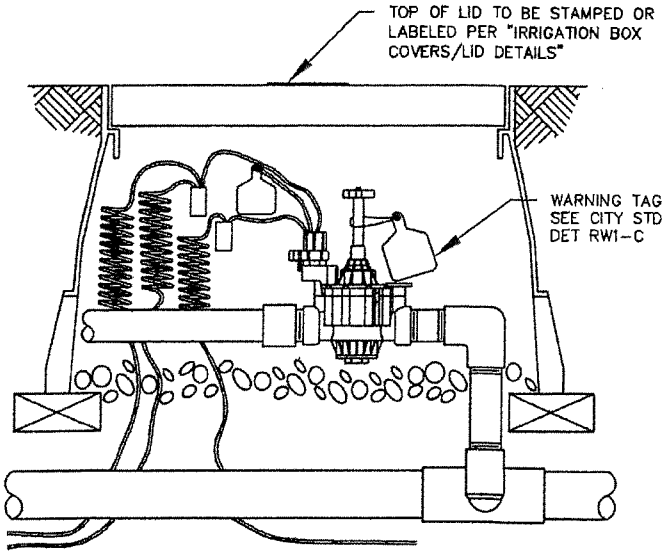

REMOTE CONTROL VALVE DETAIL

NOT TO SCALE

RECYCLED WATER LABELS - 2	APPROVED BY:	
	DATE : DEC 2014 REVISED : –	DWG. **RW-1B**

RECYCLED WATER

RECYCLED WATER COLOR: PURPLE

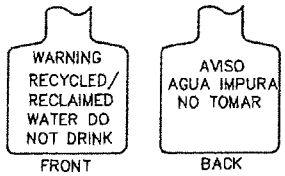

SAMPLE WARNING TAG. BACKGROUND PURPLE (PANTONE 512) WITH BLACK LETTERING.

NOTE: T CHRISTY ENTERPRISES INC.
P/N: ID-MAX-P2-RC006 (OR APPROVED EQUAL)

POTABLE WATER

DRINKING WATER COLOR: BLUE

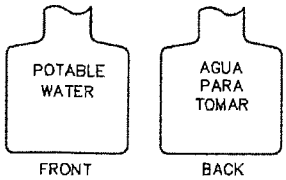

NOTE: T CHRISTY ENTERPRISES INC.
P/N: ID-MAX-B1-PW014 (OR APPROVED EQUAL)

WARNING TAG INFORMATION

NOT TO SCALE

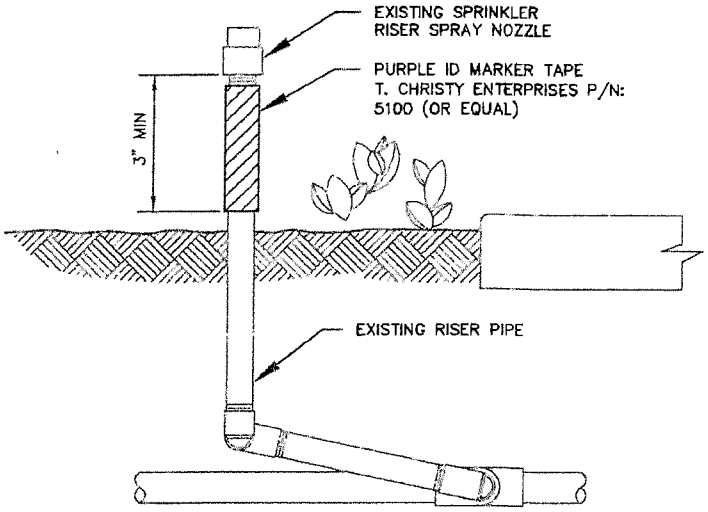

RECYCLED WATER RISER MARKER DETAIL

NOT TO SCALE

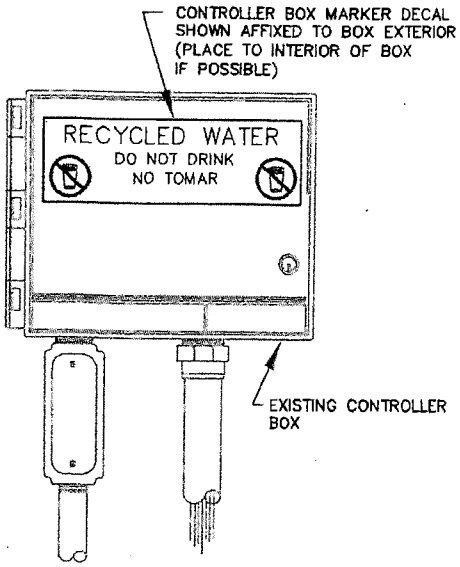

NOTE: T CHRISTY ENTERPRISES, INC.
CATALOG P/N: 4100 (OR APPROVED EQUAL)

CONTROLLER BOX MARKER DETAIL

NOT TO SCALE

RECYCLED WATER LABELS - 3

APPROVED BY:

DATE : DEC 2014	DWG.	RW-1C
REVISED : -		

SITUATION

CRITERIA

PARALLEL

CASE 1

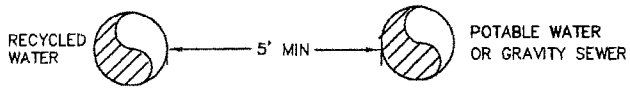

* NO JOINT CONTROL FOR STEEL, DIP, AND PVC

CROSSING #1

CASE 2A
SEE RW-2B

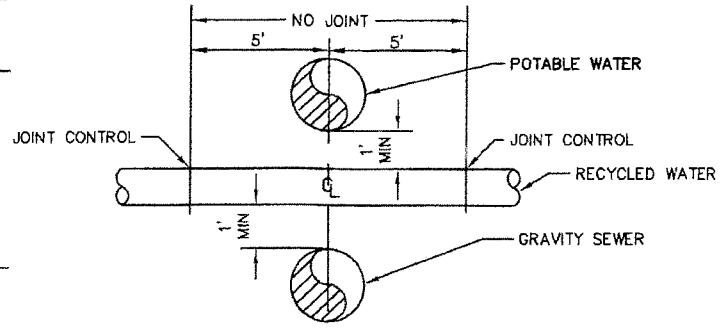

* JOINT CONTROL FOR STEEL, DIP, AND PVC
* RECYCLED WATER PIPELINE SHOULD BE BELOW POTABLE PIPELINES AND ABOVE STORM AND SANITARY SEWER PIPELINES.

CROSSING #2

CASE 2B
SEE RW-2B

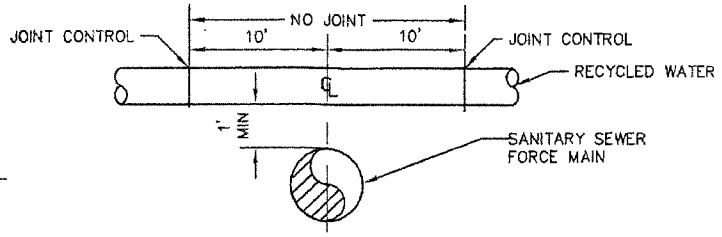

* NO PVC
* STEEL WITH DOUBLE WELDED JOINTS
* DIP WITH MECHANICAL RESTRAINT JOINTS
* LOCATE JOINTS MIN. 10' FROM THE CROSSING

CROSSING #3

CASE 2C
SEE RW-2B

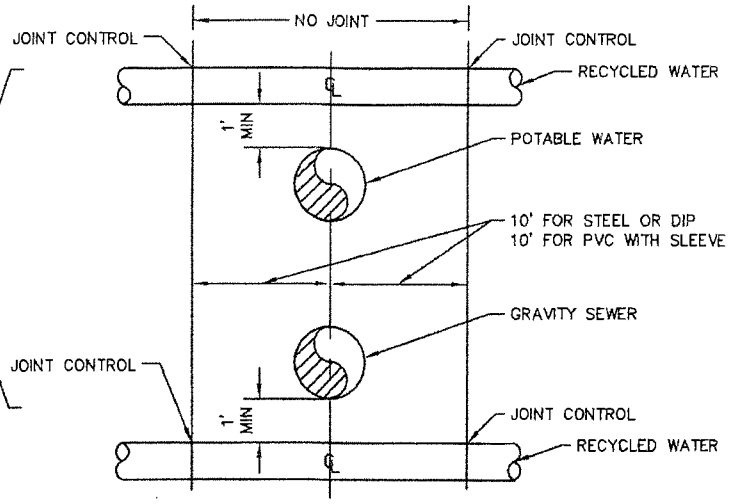

* STEEL WITH DOUBLE WELDED JOINTS
* DIP WITH MECHANICAL RESTRAINT JOINTS
* LOCATE JOINTS MIN. 10' FROM THE CROSSING (STEEL & DIP)
* PVC PIPE WITH JOINT RESTRAINT AND REQUIRED CONTINUOUSLY SLEEVED FOR 20' FROM THE CROSSING

PIPE CLEARANCE REQUIREMENT DETAILS

NOT TO SCALE

RECYCLED WATER SEPARATION REQUIREMENTS - 1	APPROVED BY:	
	DATE : DEC 2014 REVISED : –	DWG. RW-2A

BASIC SEPARATION STANDARDS:

CASE 1. PARALLEL CONSTRUCTION

WHEN RECYCLED WATER MAINS ARE AT LEAST 5 FEET (MEASURED FROM EDGE OF PIPE-TO-EDGE OF PIPE) FROM POTABLE WATER AND/OR SANITARY SEWER MAINS OR STORM DRAINS, RECYCLED WATER MAIN CAN BE INSTALLED WITH STEEL PIPE (SP), DUCTILE IRON (DIP), AND PLASTIC PIPE (PVC) WITHOUT JOINT CONTROL. WHEN LOCATED NEAR A SEWER FORCE MAIN, RECYCLED WATER MAIN IS TO BE CONSTRUCTED MAINTAINING THE 10 FEET MINIMUM SEPARATION REQUIREMENT AND ONLY SP AND DIP ARE ACCEPTABLE MATERIALS (SEE PARALLEL DETAIL ON CITY STD DETAIL RW-2A).

CASE 2. CROSSING CONSTRUCTION

2A. (SEE CROSSING #1 DETAIL ON CITY STD DETAIL RW-2A) AT CROSSING WHERE RECYCLED WATER MAINS ARE TO BE CONSTRUCTED. MAINTAIN 1 FOOT MINIMUM VERTICAL CLEARANCE (MEASURED FROM EDGE-OF-PIPE TO EDGE-OF-PIPE) FROM ANY UNDERGROUND UTILITIES, INCLUDING POTABLE WATER LINES, SANITARY SEWERS, STORM DRAINS, GAS LINES, ELECTRICAL DUCTBANKS, ETC. WHEN RECYCLED WATER MAINS ARE 1 FOOT BELOW THE POTABLE WATER MAINS AND/OR 1 FOOT ABOVE THE SANITARY SEWER MAINS, THE PIPE JOINTS MUST BE LOCATED AT LEAST 5 FEET FROM THE EXISTING PIPE (MEASURED FROM CENTERLINE OF EXISTING PIPE TO THE JOINT). SP, DIP, AND PVC ARE ALL ACCEPTABLE PIPE MATERIALS.

2B. (SEE CROSSING #2 DETAIL ON CITY STD DETAIL RW-2A) WHEN CROSSING A SANITARY SEWER FORCE MAIN, THE RECYCLED WATER MAIN MUST BE LOCATED AT LEAST 1 FOOT ABOVE THE EXISTING FORCE MAIN. ONLY SP WITH DOUBLE WELDED JOINTS AND DIP WITH MECHANICALLY RESTRAINED JOINTS ARE ACCEPTABLE. RECYCLED WATER PIPE JOINTS MUST BE LOCATED AT LEAST 10 FEET FROM THE CENTERLINE OF EXISTING SANITARY SEWERS FORCE MAIN.

2C. (SEE CROSSING #3 DETAIL ON CITY STD DETAIL RW-2A) WHEN THE RECYCLED WATER MAINS ARE 1 FEET ABOVE THE POTABLE WATER LINES AND/OR 1 FOOT BELOW THE SANITARY SEWER MAINS, SP SHALL BE CONSTRUCTED WITH DOUBLE WELDED JOINTS, DIP USED SHALL HAVE MECHANICAL RESTRAINED JOINTS. BOTH SP AND DIP JOINTS MUST BE LOCATED AT LEAST 10 FEET FROM THE CENTERLINE OF EXISTING SANITARY SEWERS AND/OR EXISTING WATER LINES. IF PVC IS USED FOR RECYCLED WATER PIPELINE AT CROSSING, IN ADDITION TO THE JOINT THRUST RESTRAINT DEVICES, A CONTINUOUS SLEEVE FOR A DISTANCE OF 10 FEET ON EITHER SIDE OF CROSSING SHALL BE INSTALLED.

GENERAL NOTES

1. ALL SP USED FOR PIPING SHALL MEET A MINIMUM INTERNAL PRESSURE OF 200 PSI. NO MINIMUM PIPE WALL THICKNESS REQUIRED. (PIPE WALL THICKNESS SHALL BE CHOSEN BASED ON THE INTERNAL PRESSURES AND EXTERNAL LOADS EXERTED ON THE PIPE, THE MOST CONSERVATIVE DESIGN FOR PIPE WALL THICKNESS MUST BE SPECIFIED).

2. DIP USED FOR PIPING, THE STANDARD PIPE WALL THICKNESS SHALL BE DETERMINED BY THE STANDARD PIPELINE DESIGN, THERE IS NO MINIMUM INTERNAL PRESSURE REQUIREMENT.

3. PVC USED FOR PIPING, A DIMENSION RATIO (DR) OF 14 AND PRESSURE CLASS OF 200 MUST BE SPECIFIED. ALSO REFER TO AWWA C900 REQUIREMENTS.

4. PROPER CORROSION PROTECTION TO PIPELINES IS REQUIRED WHICH INCLUDES BUT IS NOT LIMITED TO OUTSIDE COATING, INSIDE LINING, DIELECTRIC TREATMENT, AND OTHER CATHODIC PROTECTION.

5. ANY EXCEPTIONS TO THE REQUIREMENTS OF THIS DETAIL REQUIRE A SPECIAL REVIEW AND APPROVAL SHALL BE GRANTED BY THE CALIFORNIA DEPARTMENT OF PUBLIC HEALTH.

RECYCLED WATER SEPARATION REQUIREMENTS - 2	APPROVED BY:	
	DATE : DEC 2014 REVISED : -	DWG. **RW-2B**

IRRIGATION SYSTEM NOTES:

1. ALL WORK SHALL CONFORM TO EXISTING REGULATIONS INCLUDING, BUT NOT LIMITED TO:
   1.1. CITY OF SUNNYVALE RECYCLED WATER PROGRAM SITE DESIGN REQUIREMENTS (PROVIDED BY THE ENVIRONMENTAL SERVICES DEPARTMENT).
   1.2. CA DEPARTMENT OF PUBLIC HEALTH REGULATIONS, INCLUDING TITLES 17 AND 22.

2. CHANGES MADE TO THE APPROVED IRRIGATION PLANS SHALL BE SUBMITTED TO THE CITY CROSS CONNECTION SPECIALIST FOR REVIEW AND APPROVAL AT LEAST FOUR WEEKS PRIOR TO START OF CONSTRUCTION.

3. AT LEAST FIVE WORKING DAYS PRIOR TO START OF CONSTRUCTION, THE CONTRACTOR, CUSTOMER, AND CITY CROSS CONNECTION SPECIALIST SHALL HOLD A PRE-CONSTRUCTION MEETING.

4. CONTRACTOR SHALL NOTIFY CITY OF SUNNYVALE, ENVIRONMENTAL SERVICES DEPARTMENT – RECLAIMED WATER USE SECTION AT TELEPHONE NUMBER (408) 730-7900 AND CUSTOMER A MINIMUM OF AT LEAST 2 WEEKS BEFORE WORK BEGINS. THE CONTRACTOR SHALL ALSO NOTIFY ENVIRONMENTAL SERVICES AND CUSTOMER AGAIN AT LEAST 48 HOURS IN WRISRING BEFORE STARTING ANY ONSITE WORK. CITY INSPECTOR MUST INSPECT AND/OR VERIFY:
   4.1. PRESENCE OF BACKFLOW PREVENTION AT ALL POTABLE POINTS OF CONNECTION.
   4.2. NEW UNDERGROUND PIPING (LABELING, CLEARANCES, BURIAL DEPTH, SLEEVING).
   4.3. PRESSURE TEST.
   4.4. INSTALLATION OF SIGNS, TAGS, LABELS, AND CONTROLLER DECALS.
   4.5. SITE PASSED A CROSS-CONNECTION TEST PERFORMED BY A CERTIFIED AWWA CROSS-CONNECTION SPECIALIST.
   4.6. NEW METER INSTALLATION.
   4.7. COVERAGE TEST.

5. AT NO TIME SHALL CROSS-CONNECTION FROM POTABLE WATER TO RECYCLED WATER BE PERMITTED.

6. ALL NEW ON-SITE BURIED RECYCLED WATER PIPING SHALL BE IDENTIFIED BY THE FOLLOWING METHODS:
   6.1 USING PURPLE-COLORED PVC PIPE WITH CONTINUOUS WORDING "CAUTION – RECYCLED WATER" PRINTED ON OPPOSITE SIDES OF THE PIPE. PIPE SHALL BE LAID WITH WORDING FACING UPWARDS.
   6.2 WARNING TAPE WITH A MINIMUM WIDTH OF 3 INCHES READING "CAUTION – RECYCLED WATER" (IN BLACK OR WHITE LETTERING ON PURPLE BACKGROUND) SHALL RUN CONTINUOUSLY ON TOP OF PIPING AND SHALL BE ATTACHED TO PIPING WITH PLASTIC TAPE BANDED AROUND THE WARNING TAPE AND THE PIPE EVERY 5 FEET ON CENTER.

7. CONSTANT-PRESSURE MAINLINE PIPING 2 INCHES AND SMALLER SHALL BE PVC PIPE; CONSTANT PRESSURE MAINLINE PIPING 2 ½ INCHES AND LARGER SHALL BE CLASS 315; AND INTERMITTENT-PRESSURE LATERAL PIPING SHALL BE CLASS 200 OR SCHEDULE 40. COPPER PIPE SHALL BE TYPE "K".

8. ALL ON-SITE RECYCLED WATER PIPING SHALL BE BURIED TO A MINIMUM DEPTH FROM FINISHED GRADE TO TOP OF PIPE (MINIMUM COVER) OF:
   8.1. PRESSURIZED LINES OF 3 INCHES AND LARGER: 24 INCHES
   8.2. PRESSURIZED LINES 2 ½ INCHES AND SMALLER: 18 INCHES
   8.3. INTERMITTENT-PRESSURE LINES: 12 INCHES

9. ALL RECYCLED WATER PIPING, OTHER THAN PVC PIPING WITH SOLVENT WELDED JOINTS SHALL BE PROTECTED AGAINST MOVEMENT WITH THRUST BLOCKS OR RESTRAINED JOINTS OR OTHER APPROVED METHOD.

10. MAINTAIN A 5-FOOT HORIZONTAL SEPARATION BETWEEN PRESSURIZED RECYCLED WATER IRRIGATION PIPING AND POTABLE WATER PIPING. AT PIPE CROSSINGS, RECYCLED WATER IRRIGATION WATER PIPING MUST BE 12 INCHES BELOW POTABLE WATER LINES. IF RECYCLED WATER PIPING MUST CROSS OVER POTABLE WATER LINES, THE RECYCLED WATER PIPING SHALL BE AT LEAST 12 INCHES ABOVE THE POTABLE LINES AND SHALL BE INSTALLED IN A PVC SLEEVE WHICH EXTENDS A MINIMUM OF 10 FEET ON EITHER SIDE OF THE POTABLE WATER PIPING (SEE CITY STD DET RW-02A).

11. POTABLE WATER AND RECYCLED WATER PIPING SHALL NOT BE INSTALLED IN THE SAME TRENCH.

12. ALL RECYCLED WATER SYSTEM REMOTE CONTROL VALVES, QUICK COUPLING VALVES, GATE VALVES, BLOW OFF VALVES, STRAINERS, AND PRESSURE-REGULATING VALVES SHALL BE INSTALLED BELOW GRADE IN VALVE BOXES. VALVE BOXES SHALL BE LABELED PER CITY RW-1A.

13. NO HOSE BIBS SHALL BE ALLOWED ON THE RECYCLED WATER IRRIGATION SYSTEM. EXISTING HOSE BIBS TO BE CONNECTED TO RECYCLED WATER SHALL BE REPLACED WITH QUICK COUPLING VALVES. QUICK COUPLING VALVES SHALL BE PER CITY STANDARD DETAIL RW-1B AND LABELED PER CITY STD DET RW-1A.

14. LABEL ALL POTABLE WATER METERS AND ABOVE GROUND POTABLE WATER PIPES/DEVICES (BACKFLOW PREVENTERS, HOWE BIBS, ETC.) WITHIN OUR NEAR THE RECYCLED WATER USE AREA WITH TAGS OR LABELS READING "POTABLE WATER" IN BLACK LETTERS ON BLUE BACKGROUND, PER CITY STD DET RW-1A, RW-1B, AND RW-1C.

15. ALL RECYCLED WATER IRRIGATION SYSTEMS SHALL INCLUDE THE FOLLOWING:
   15.1. A WYE STRAINER (WITH A 20 MESH OR FINER SCREEN) INSTALLED AS CLOSE AS PRACTICAL TO THE RECYCLED WATER METER BOX.
   15.2. A PRESSURE REGULATING VALVE INSTALLED IMMEDIATELY DOWNSTREAM OF THE STRAINER IF BOOSTER PUMP STATION IS NOT PRESENT.
   15.3. THESE COMPONENTS SHALL BE INSTALLED WITH ISOLATION VALVES.

16. PLACE RECYCLED WATER ADVISORY SIGNS AT ENTRANCE TO THE RECYCLED WATER USE AREA IN A MANNER THAT DOES NOT OBSTRUCT THEM FROM VIEW.

17. THE CONTRACTOR SHALL PROVIDE THE ENGINEER AND UPDATE AS NECESSARY, A CONSTRUCTION SCHEDULE THAT SHOWS THE START OF EACH CONSTRUCTION ACTIVITY, INCLUDING REQUIRED TESTS, INSPECTIONS AND INITIATION OF RECYCLED WATER SERVICE.

18. THE CONTRACTOR IS RESPONSIBLE TO COORDINATE WITH UNDERGROUND SERVICE ALERT (800) 227-2600 AND PROPERTY OWNER TO LOCATE UTILITY CROSSINGS AND TO EXCAVATE WITH CAUTION TO AVOID UTILITY DAMAGE.

19. ALL UTILITIES AND IMPROVEMENTS THAT ARE DAMAGED DURING CONSTRUCTION SHALL BE COMPLETED RESTORED TO THE SATISFACTION OF THE ENGINEER.

20. ALL REFUSE AND OTHER DEMOLISHED WORK SHALL BECOME PROPERTY OF THE CONTRACTOR AND SHALL BE LEGALLY DISPOSED OF OFF-SITE. EXCEPTION IS ANY EXISTING IRRIGATION SYSTEM BACKFLOW PREVENTER DEVICE – REUSE BACKFLOW DEVICE IS POSSIBLE AND ON THE UNIVERSITY OF SOUTHERN CALIFORNIA (USC) APPROVAL LIST. OTHERWISE CONTACT CITY TO DETERMINE IF SITE OWNER WISHES TO SALVAGE THE DEVICE AND PROVIDE TO OWNER IF REQUESTED, OTHERWISE DISPOSE.

21. CONTRACTOR IS PROHIBITED FROM DISCHARGING POLLUTANTS (OILS, GARBAGE, CHEMICALS, SEDIMENTS, SOILS, ETC.) TO THE STORM DRAIN SYSTEM.

RECYCLED WATER DESIGN DRAWING GENERAL NOTES - 1	APPROVED BY:	
	DATE : DEC 2014 REVISED : –	DWG. RW-3A

IRRIGATION SYSTEM NOTES (CONTINUED FROM RW-3A):

22. PRIOR TO TURNING OFF ANY WATER METER OR OTHER UTILITY, THE CONTRACTOR SHALL COORDINATE WITH ENGINEER TO ESTABLISH WORKING HOURS, ACCESS, AND OTHER CONSTRAINTS FOR EACH SITE. THE CONTRACTOR SHALL NOTIFY CUSTOMER AND THE ENGINEER TWO WEEKS BEFORE THE PLANNED OUTAGE AND AT LEAST THREE DAYS IN ADVANCE OF THE ACTUAL OUTAGE.

23. PRIOR TO RECEIVING RECYCLED WATER, EACH SITE MUST BE PERMITTED BY CITY OF SUNNYVALE ENVIRONMENTAL SERVICES DEPARTMENT. A PERMIT WILL BE GRANTED AFTER:
    - 23.1. CONSTRUCTION HAS BEEN COMPLETED AND INSPECTED TO SHOW CONFORMANCE TO CALIFORNIA DEPARTMENT OF PUBLIC HEALTH (CDPH) APPROVED PLANS.
    - 23.2. SITE HAS PASSED REQUIRED CROSS-CONNECTION TEST PERFORMED BY A CERTIFIED AWWA CROSS-CONNECTION SPECIALIST.
    - 23.3. A FINAL ON-SITE INSPECTION HAS BEEN CONDUCTED TO CONFIRM THAT ALL REQUIREMENTS HAVE BEEN MET.
    - 23.4. THE OWNERS OR OWNER'S REPRESENTATIVE HAS COMPLETED CITY RECYCLED WATER SITE-SUPERVISORY TRAINING. FOR TRAINING CONTACT ENVIRONMENTAL SERVICES DEPARTMENT AT (408) 730-7900.

24. ALL RECYCLED WATER METERS WILL BE IN PLACE AND LOCKED OFF, OR WILL BE SET BY THE ENVIRONMENTAL SERVICES DEPARTMENT, BEFORE CONSTRUCTION IS COMPLETED. AFTER THE SITE PASSES A CROSS-CONNECTION TEST, THE RECYCLED WATER METER WILL BE UNLOCKED BY THE ENVIRONMENTAL SERVICES STAFF.

25. NO OVERSPRAY OR RUNOFF OF RECYCLED WATER SHALL BE ALLOWED ON ANY NON-APPROVED USE AREA. UPON RECEIVING RECYCLED WATER, THE ON-SITE SPRAY MIST OR RUNOFF SHALL NOT ENTER DWELLINGS OR DESIGNATED OUTDOOR EATING AREAS. DRINKING WATER FOUNTAINS BE PROTECTED AGAINST CONTACT WITH RECYCLED WATER SPRAY, MIST, OR RUNOFF.

26. CONTRACTOR SHALL SUBMIT RECORD DRAWINGS SHOWING AS-BUILT CONDITIONS OF IRRIGATION SYSTEM AND RELATED WORK TO THE ENVIRONMENTAL SERVICES DEPARTMENT - RECYCLED WATER SECTION WITHIN 30 DAYS OF SITE RECEIVING RECYCLED WATER.

27. NO IRRIGATION WITH DISINFECTED TERTIARY RECYCLED WATER SHALL TAKE PLACE WITHIN 50 FEET OF ANY DOMESTIC WATER SUPPLY WELL UNLESS ALL OF THE FOLLOWING CONDITIONS HAVE BEEN MET:
    - 27.1. A GEOLOGICAL INVESTIGATION DEMONSTRATES THAT AN AQUITARD EXISTS AT THE WELL BETWEEN THE UPPERMOST AQUIFER BEING DRAWN FROM AND THE GROUND SURFACE.
    - 27.2. THE WELL CONTAINS AN ANNULAR SEAL THAT EXTENDS FROM THE SURFACE INTO THE AQUITARD.
    - 27.3. THE WELL IS HOUSED TO PREVENT ANY RECYCLED WATER SPRAY FROM COMING INTO CONTACT WITH THE WELLHEAD FACILITIES.
    - 27.4. THE GROUND SURFACE IMMEDIATELY AROUND THE WELLHEAD IS CONTOURED TO ALLOW SURFACE WATER TO DRAIN AWAY FROM THE WELL.
    - 27.5. THE OWNER OF THE WELL APPROVES THE ELIMINATION OF THE BUFFER ZONE REQUIREMENT.

28. NO IMPOUNDMENT OF DISINFECTED TERTIARY RECYCLED WATER SHALL OCCUR WITHIN 100 FEET OF ANY DOMESTIC WATER SUPPLY WELL.

29. INSTALL BACKFLOW PREVENTER ASSEMBLY ON ALL POTABLE WATER AND FIRE SERVICES PER CITY STD DET 18B-1.

30. PRIOR TO ACTUAL SERVICE CONNECTION TO RECYCLED WATER SYSTEM, CONTRACTOR SHALL PROVIDE TEMPORARY PIPING TO POTABLE SYSTEM SO THAT CITY PERSONNEL MAY PERFORM CROSS-CONNECTION TEST. UPON SUCCESSFUL CROSS-CONNECTION TEST, CONTRACTOR SHALL REMOVE TEMPORARY PIPING AND PERFORM FINAL CONNECTION TO THE RECYCLED WATER METER.

CONTRACTOR SHALL RESTORE THE AREAS IMPACTED BY THE CONSTRUCTION TO THEIR ORIGINAL CONDITION UNLESS OTHERWISE NOTED.

32. ADD RECYCLED WATER DECAL STICKER TO THE EXTERIOR OF ALL IRRIGATION CONTROLLERS OPERATING IN THE RECYCLED WATER USE AREA.

RECYCLED WATER DESIGN DRAWING GENERAL NOTES - 2	APPROVED BY:	
	DATE : DEC 2014 REVISED : -	DWG. **RW-3B**

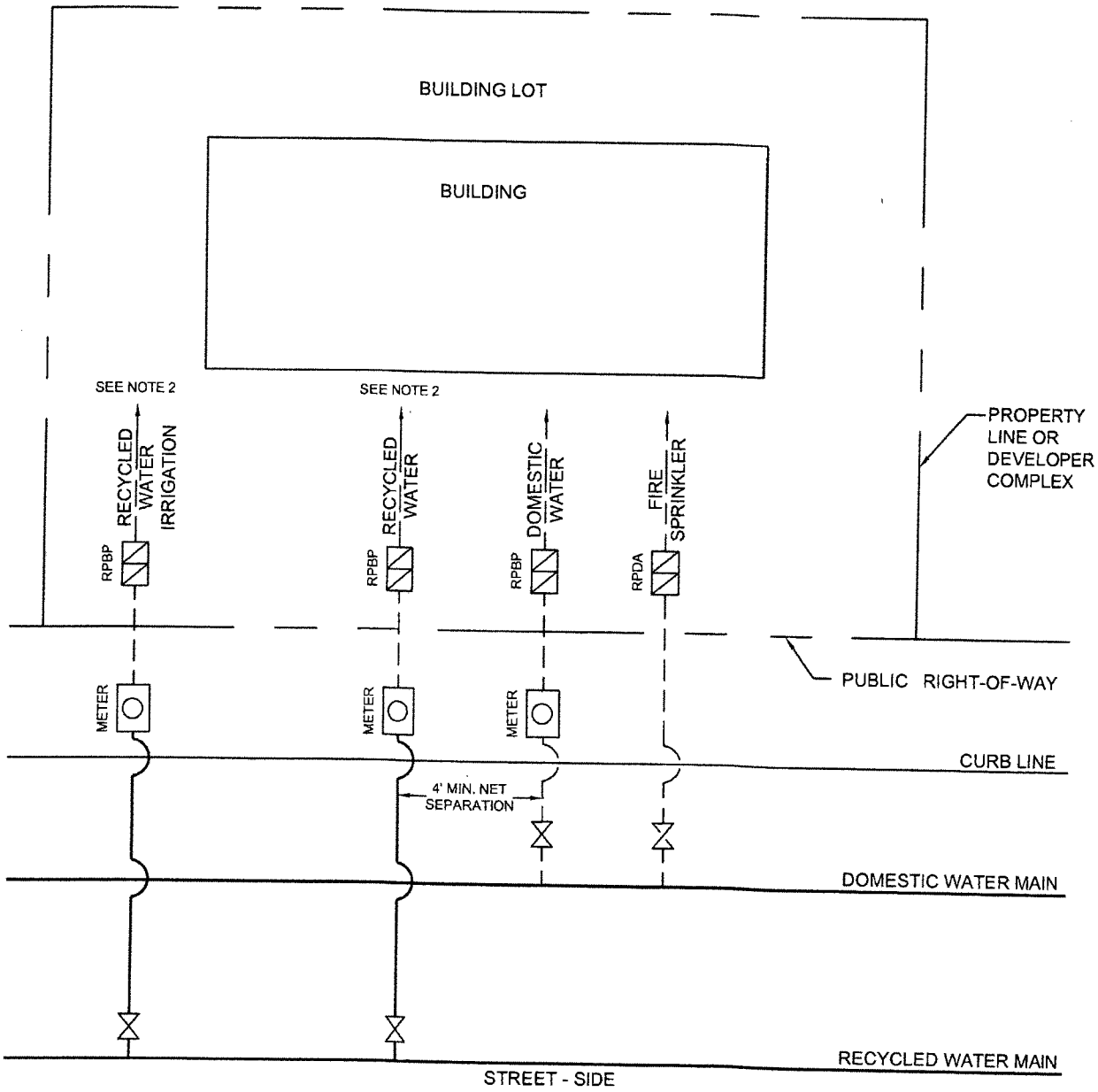

NOTE:

1. ALL BACKFLOW PREVENTERS MUST BE APPROVED PER CITY STANDARD DETAIL 20B OR 20B-1.
2. BACKFLOW PREVENTER FOR RECYCLED WATER SYSTEM MUST MEET PLUMBING CODE AND CALIFORNIA CODE OF REGULATION REQUIREMENTS.
3. METERS TO BE INSTALLED PER STANDARD DETAIL DRAWING 4B, 4B-1A AND RW-1A

ABBREVIATIONS:

RPBP	REDUCED PRESSURE BACKFLOW PREVENTER
RPDA	REDUCED PRESSURE DETECTOR ASSEMBLY

INSTALLATION OF RECYCLED WATER SERVICE LINES	APPROVED BY:	
	DATE: APRIL 2016 REVISED: FEB 2017	DWG. RW-4

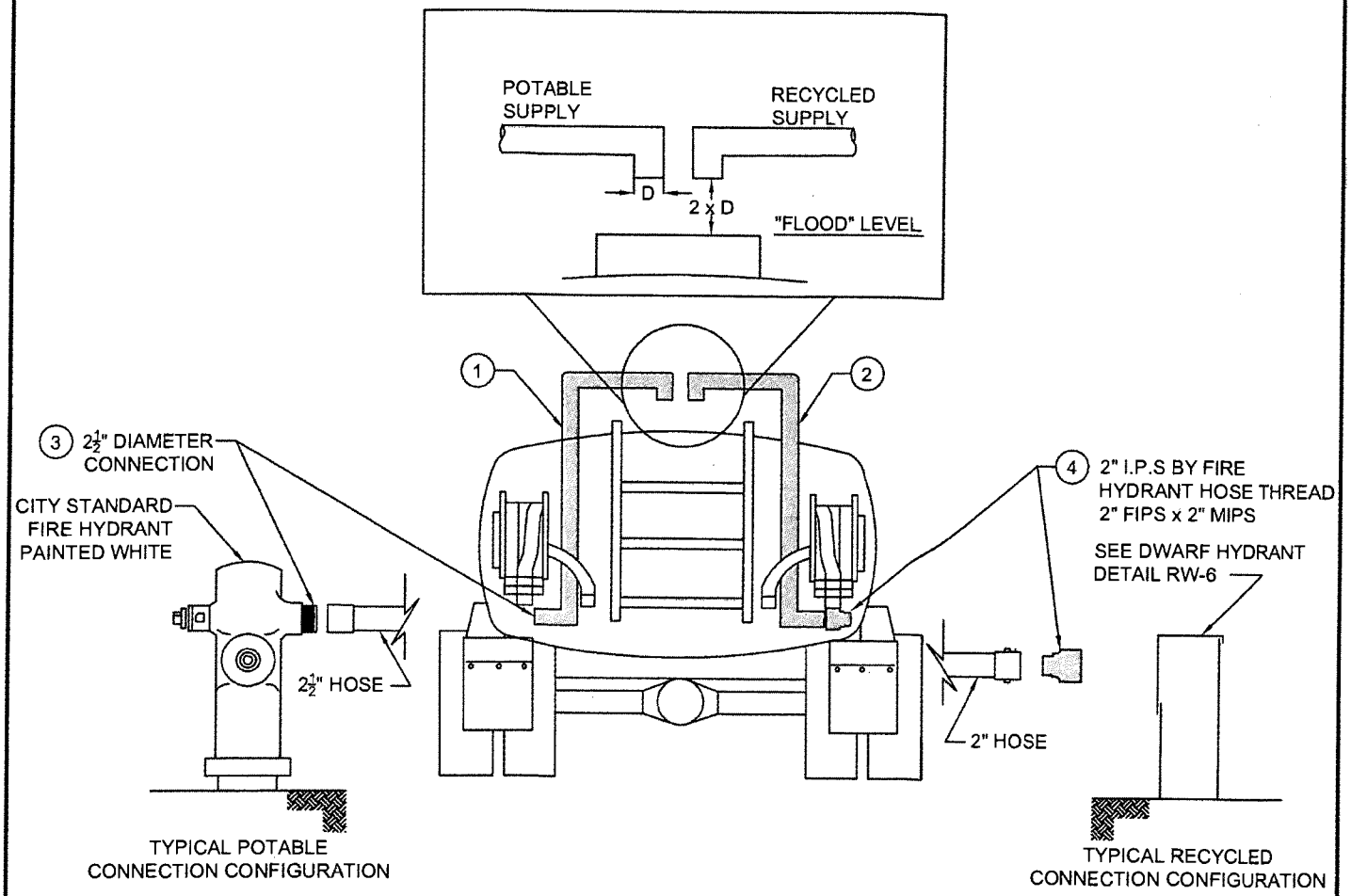

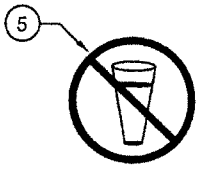

NOTES:

1. THE POTABLE SUPPLY PIPELINE ON TRUCK SHALL BE PAINTED BLUE WITH "POTABLE WATER" STENCILED ON THE PIPELINE.
2. THE RECYCLED SUPPLY PIPELINE ON TRUCK SHALL BE PAINTED PURPLE WITH "RECYCLED WATER" STENCILED ON THE PIPELINE.
3. THE POTABLE SUPPLY CONNECTION BETWEEN THE HOSE AND HYDRANT SHALL BE A STANDARD 2½" DIAMETER THREADED CONNECTION
4. THE RECYCLED SUPPLY CONNECTION BETWEEN THE HOSE AND HYDRANT SHALL BE A STANDARD 2" DIAMETER THREADED CONNECTION
5. SIGNAGE IS REQUIRED ON BOTH SIDES, WITH WORDING "RECYCLED WATER - DO NOT DRINK" AND THE INTERNATIONAL SYMBOL SHOWN.

TYPICAL TRUCK AND WATER SUPPLY SYSTEMS	APPROVED BY:	
	DATE : APRIL 2016	DWG. RW-5

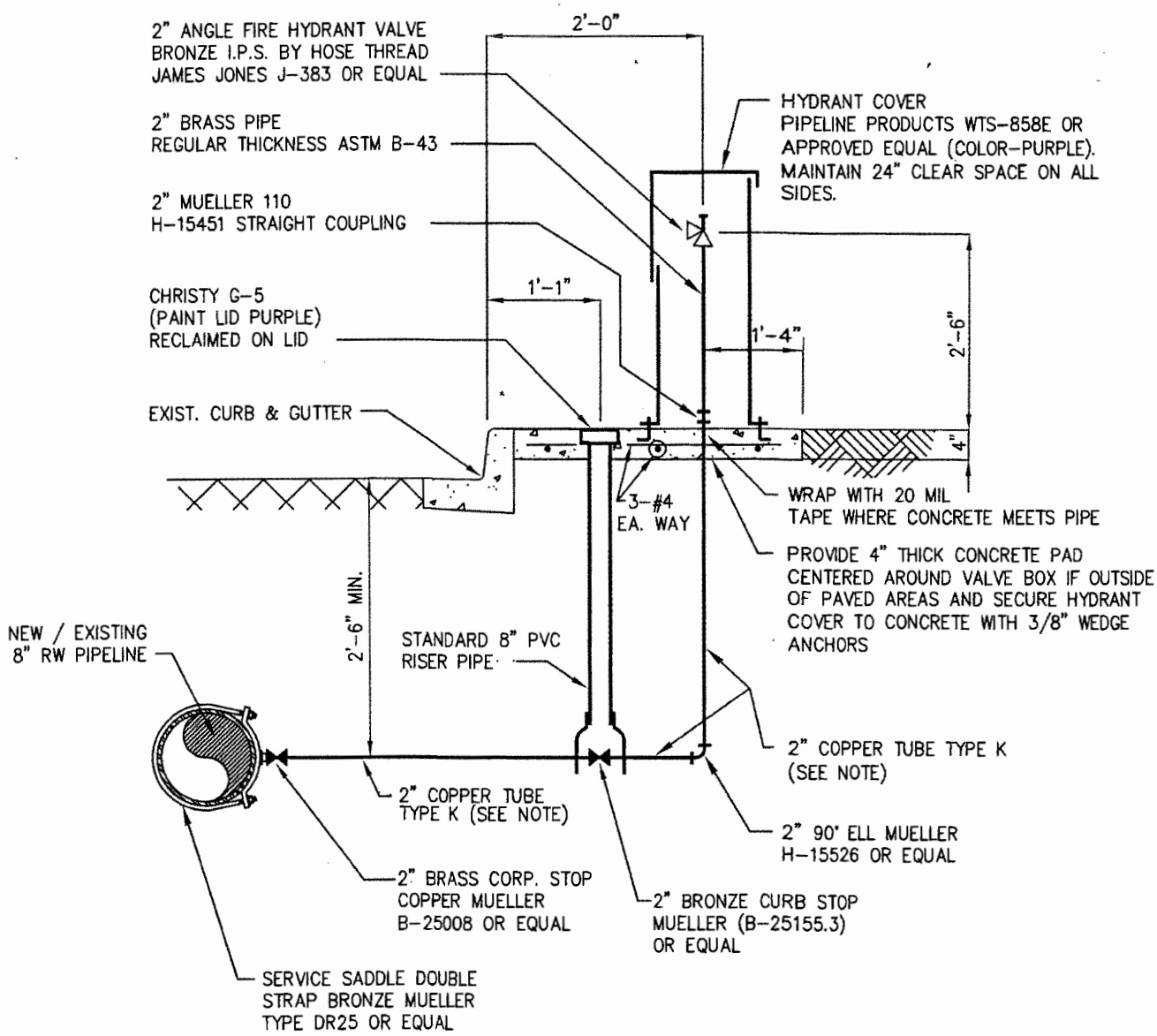

NOTE:
ALL BURIED COPPER TUBE TYPE K TO BE PRIMED AND WRAPPED WITH 20 MIL POLYETHYLENE OR PLASTIC SLEEVED AND TAPED.

DWARF HYDRANT DETAIL

NO SCALE

DWARF HYDRANT	APPROVED BY:	
	DATE : APRIL 2016 REVISED :	DWG. RW-6

NOTES:

1. ALL PARTS MANUFACTURED BY VISCO UNLESS OTHERWISE NOTED.
2. CITY MAY APPROVE EQUIVALENT PRODUCTS AT ITS DISCRETION.

PAINT SPECIFICATION

ALL CAST IRON AND STEEL LIGHT POLE PARTS ARE TO BE FACTORY POWDER COATED "BLACK".

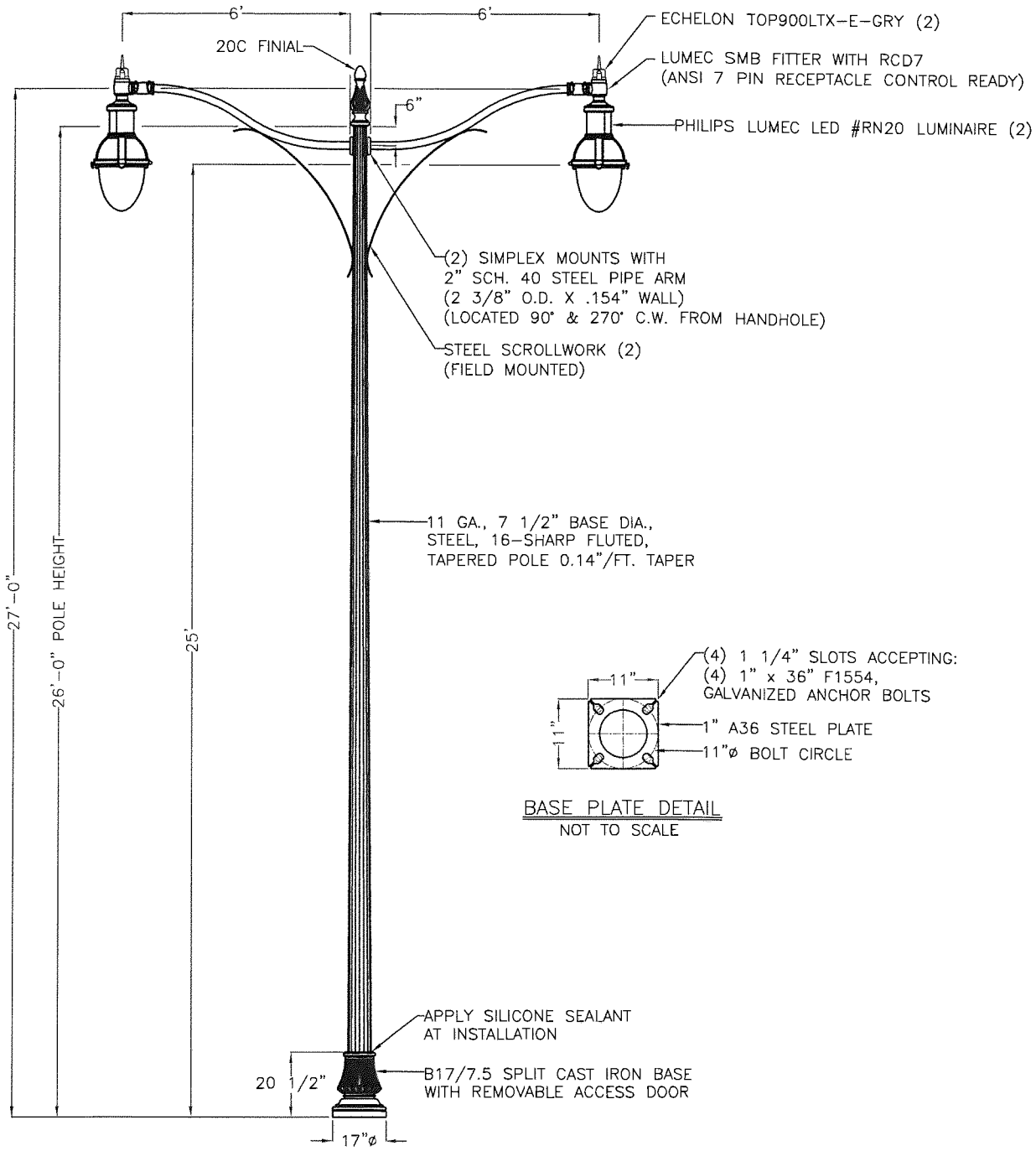

BASE PLATE DETAIL
NOT TO SCALE

POLE NO. VI-B17/7.5-S2/6'-F/26'

BOULEVARD DOUBLE-ARM STREETLIGHT IN CENTER MEDIAN	Sunnyvale	APPROVED BY:
	DATE: FEB 2017 REVISION: OCT 2017	DWG. PP1

NOTES:

1. ALL PARTS MANUFACTURED BY VISCO UNLESS OTHERWISE NOTED.
2. CITY MAY APPROVE EQUIVALENT PRODUCTS AT ITS DISCRETION.

PAINT SPECIFICATION

ALL CAST IRON AND STEEL LIGHT POLE PARTS ARE TO BE FACTORY POWDER COATED "BLACK".

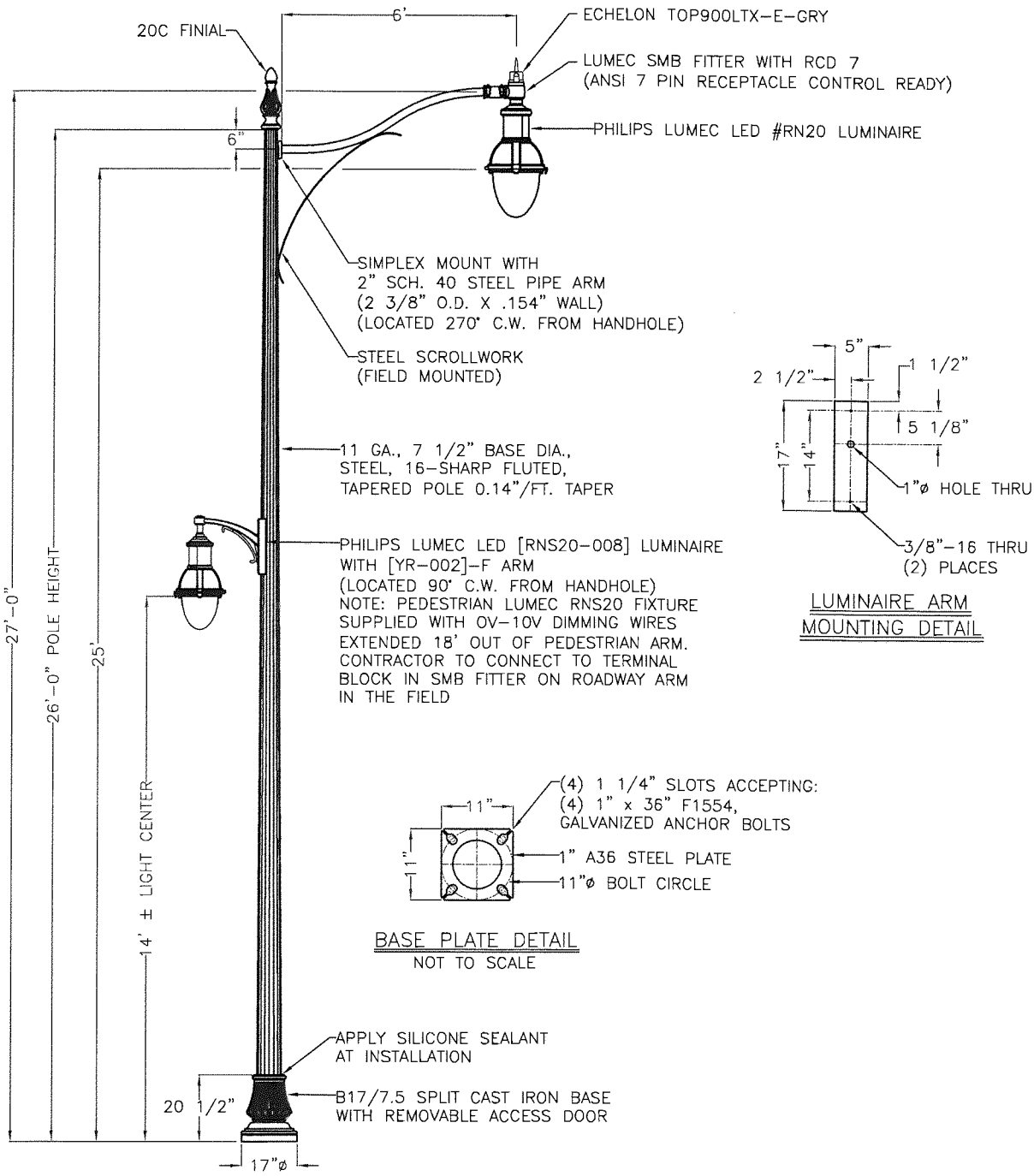

POLE NO. VI-B17/7.5-YR-S1/6'-F/26'

BOULEVARD SINGLE-ARM STREETLIGHT IN CURBSIDE PLANTER-STRIP	Sunnyvale	APPROVED BY:
	DATE: FEB 2017 REVISION: OCT 2017	DWG. PP2

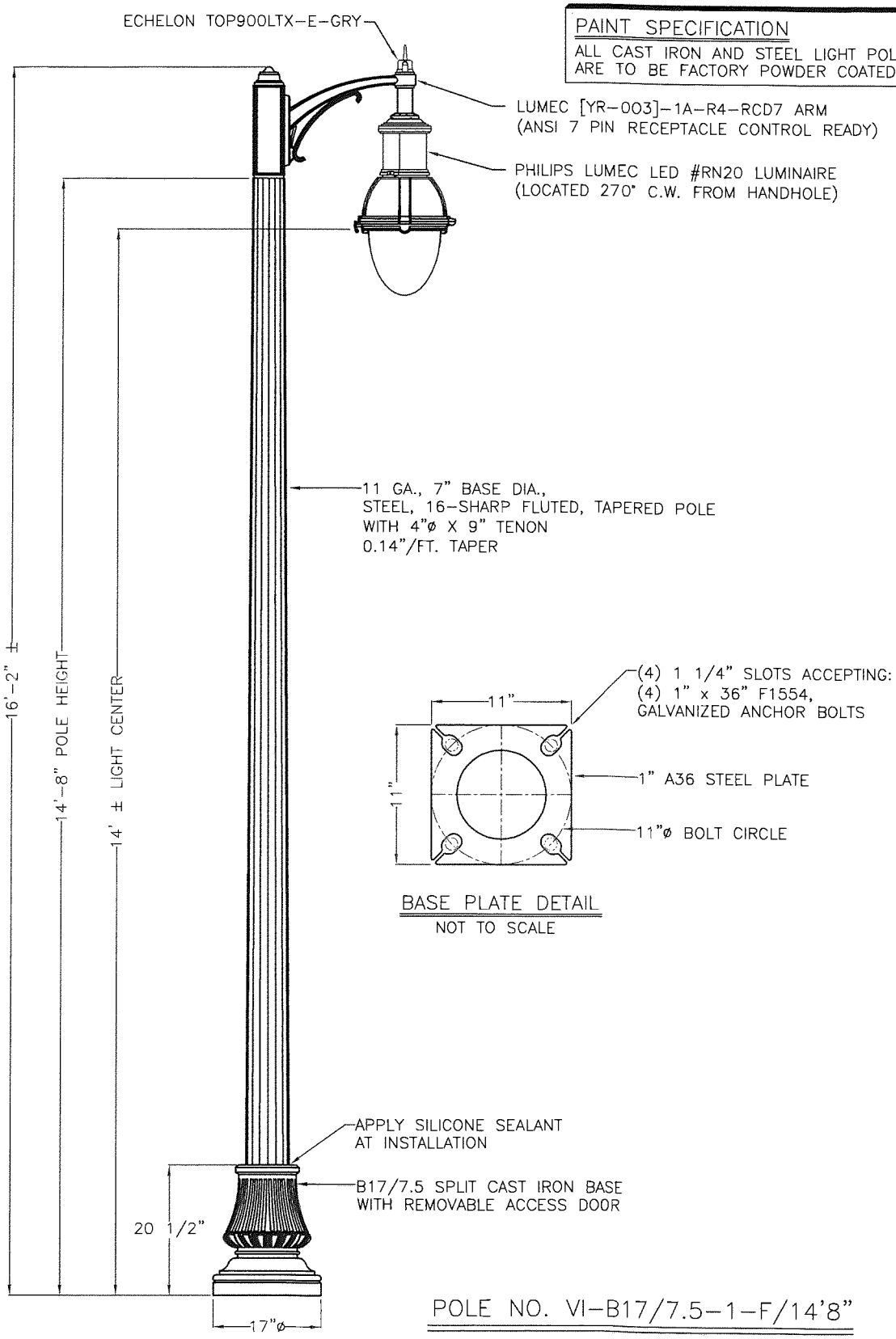

PAINT SPECIFICATION

ALL CAST IRON AND STEEL LIGHT POLE PARTS ARE TO BE FACTORY POWDER COATED "BLACK".

BASE PLATE DETAIL

NOT TO SCALE

POLE NO. VI-B17/7.5-1-F/14'8"

NOTE:

1. ALL PARTS MANUFACUTRED BY VISCO UNLESS OTHERWISE NOTED.
2. CITY MAY APPROVE EQUIVALENT PRODUCTS AT ITS DISCRETION.

PEDESTRIAN-HEIGHT SINGLE-ARM POST-TOP DECORATIVE STREETLIGHT	Sunnyvale APPROVED BY:	
	DATE: FEB 2017 REVISION: OCT 2017	DWG. PP3